# Otto von Guericke University, Magdeburg

## Faculty of Mechanical Engineering (FMB)
## Institut Für Logistik Und Materialflusstechnik (ILM)

## M.Sc. Systems Engineering for Manufacturing

**Material Handling System Design and Reliability**

Submitted for partial fulfilment of

## Digitalisation and Automation of Material Handling Systems

**By**

## Group 6


| | |
|---|---|
| Akshay Dineshbhai Chandrola | 234905 |
| Anuroop Showri Sarangam | 235225 |
| Rajesh Kamma | 235117 |
| Sagar Prakash Jadhav | 235161 |


Supervised and Co-ordinated by:

**Prof. Dr.-Ing. Andre Katterfeld**

# Contents

List of Figure....4
List of Tables....5
Problem Statement....6
Introduction....7
End to end process in producing plastic panels....7
Objective....7
Literature Review....8
The Components used in MHS....8
1. Conveyor....8
2. Accumulators....9
3. Diverters....9
4. Identification possibilities and Sensors in the Material handling system....10
a. Computer Vision....10
b. Near Infrared (NIR) Spectrometer....10
c. Barcode Labeller....11
d. Barcode Scanner....11
e. Radio Frequency Identification (RFID)....12
f. Automatic scanning station....12
g. Proximity Sensor....12
h. Photoelectric Presence Detector....13
i. Limit switches....13
Parameters....14
1. Working cycle time....14
2. Serving system....14
3. Required throughput and throughput limit....15
4. Utilisation....15
5. Number of tasks....15
6. Mean waiting length....16
7. Cold and hot redundancy....16
8. Power consumption....16
LAYOUT 1: LION....17
Technical Block Diagram....18
Calculations for each element used....19
Overall results (Layout 1)....29

LAYOUT 2: EAGLE ..... 33
Technical Block Diagram ..... 34
Calculations for each element used ..... 35
Overall results (Layout2) ..... 44
Comparison between Layouts ..... 48
Bibliography ..... 49
Appendix: Data from EDEC – Group E ..... 51
Appendix A: MDRE Tool Data ..... 51
Appendix A.1: Identification View ..... 51
Appendix A.2: Properties ..... 52
Appendix A.2.1: Attributes ..... 52
Appendix A.3: Logistics design View ..... 53
Appendix B: Local and Domain Specific Language (AutomationML) ..... 54
Appendix C: Asset Administration Shell of Hot-Pressing System ..... 55
Appendix Bibliography ..... 57

# List of Figure

Figure 1 Curved Belt Conveyor ..... 8
Figure 2 Streight Belt Conveyor ..... 8
Figure 3 Accumulator ..... 9
Figure 4 Diverters ..... 9
Figure 5 Computer vision in manufacturing ..... 10
Figure 6 Schematic representation of the near-infrared (NIR) spectroscopy-based setup ..... 10
Figure 7 Print and Apply labelling Systems ..... 11
Figure 8 VB14N Barcode Scanner Provides a Reliable and Flexible Solution ..... 11
Figure 9 RFID scanner ..... 12
Figure 10 Automatic-barcode-scanning-station ..... 12
Figure 11 Proximity Sensor ..... 12
Figure 12 photoelectric Presence Detector ..... 13
Figure 13 Limit Switch ..... 13
Figure 14 Serving System ..... 14
Figure 15 Layout 1 Lion ..... 17
Figure 16 Layout 1 Technical Block Diagram ..... 18
Figure 17 Layout 2 Eagle ..... 33
Figure 18 Layout 2 Technical Block Diagram ..... 34
Figure 19 Comparison between Layouts ..... 48
Figure 20 Identification View ..... 52
Figure 21 Properties Attributes ..... 53
Figure 22 Logistics design View ..... 53
Figure 23 Local and Domain Specific Language (AutomationML) ..... 54
Figure 24 Asset Administration Shell of Hot-Pressing System ..... 56

# List of Tables

Table 1 Utilisation....15
Table 2 Probability distribution table - Diverters (Layout-1)....22
Table 3 Probability distribution table - CDP (Layout-1)....23
Table 4 Probability distribution table - Manual (Layout-1)....24
Table 5 Utilisation and Waiting area table (Layout-1)....29
Table 6 Power Consumption (Layout-1)....31
Table 7 Waiting area (Layout-1)....31
Table 8 Probability distribution table - Diverters (Layout-2)....37
Table 9 Probability distribution table - CDP (Layout-2)....38
Table 10 Probability distribution table - Manual (Layout-2)....39
Table 11 Utilisation and Waiting area table (Layout-2)....44
Table 12 Power Consumption (Layout-2)....46
Table 13 Waiting area (Layout-2)....46

## Problem Statement

To design an efficient automated material handling system based on continuous conveying technology for a factory that produces plastic panels (2000mm x 2000mm x 30mm thickness) with the required throughput rate of 50 panels per hour (rejected panels excluded). Material handling system should be always operated under 85% blockage-free condition.

The material in the given MHS will flow in the following sequence:

1. Source to Press workstation
2. Press to warehouse and/or press to CDP (cutting, drilling, and polishing) workstation and/or Press to Manual workstation
3. CDP to Manual and/or CDP to warehouse
4. Manual to warehouse

# Introduction

## End to end process in producing plastic panels:

The procedure begins with sorting plastic waste based on the symbol on the item, and then the recyclables are crushed into granules. The sorted granules are then mixed and poured onto a metal plate using rectangular forms, then vibrate to distribute the granules evenly. The rectangular form should be covered before being processed in a pressing station. There are two steps to pressing the granules. The first step is to press the granules at high temperatures and remove any excess material from the tray. The processed panel next undergoes a low temperature pressing. Then, take the cooled panel out of the pressing station and remove the panel's cover and base before cutting the side walls. Depending on the requirements, the panels are sent to CDP (cutting, drilling, and polishing) or Manual workstation. If no further customization is required, the panels are sent directly to the warehouse. When the panel enters CDP, use an optical scanner to detect the centre of the panel, and then cut, drill, and polish the panel to the required dimensions. Following CDP, the material flow is the same as after Press as it goes directly to the warehouse or manual workstation. If a customer requests additional panel customization, it is routed to the manual station, where it is manually processed before being transferred to the warehouse.

## Objective:

The main objective of the project is to design an MHS that meets the requirements while considering parameters such as flexibility, performance, and efficiency. The Developed MHS should fulfil a throughput rate of 50 panels per hour. The selection of the elements like the number of working stations, conveyors, accumulators, and diverters according to the required throughput rate. The MHS is completely automatic, and diverters should decide how much material it transfers to the further stations. For this purpose, MHS must be installed with different types of sensors. The given MHS includes a press workstation where the plastic granules are processed. They go through multiple operations like the hot press, cold press and removing sidewalls. Each panel has a unique structure with varying properties of the plastic granulate.

Once the plastic panels come out of the press, if they require further processing, they enter an automated CDP workstation. Once the optical measuring and centering of the panels are done, further processing such as cutting, drilling, and processing is carried out. 75% of the total panels that come from Press are sent to the CDP station and remaining to the warehouse through a central belt conveyor.

Around 15% of the total panels need customized surface preparation which is carried out at manual workstations. After this, panels are sent to the warehouse. At each workstation, an optical scan of each panel for quality check takes place. Panels that do not meet the required criteria for quality are rejected.

# Literature Review

## The Components used in MHS

### 1. Conveyor

Conveyors are endless circulating tension devices. They consist of various components like tension devices, supporting devices, guides etc. There are different possible types of conveyors that are used in continuous conveying technology.

a. Flat belt conveyor
b. Narrow belt conveyor
c. Curved flat belt conveyor
d. Telescopic flat belt conveyor
e. Slat conveyor
f. Side chain conveyor
g. Modular belt conveyor
h. Carrier chain conveyor
i. Roller conveyors

Although there are different possibilities in selecting conveyors, we preferred flat belt and curved belt conveyors in designing the material handling system due to following advantages:

- Belt conveyors are suitable for transporting goods of regular or irregular sizes. They have a smooth surface, and they normally transport in a horizontal or slightly inclined direction. Since they produce less friction, their operation is quiet. They are normally made from plastic fabric or rubber fabric. Also, they can operate up to the speed of 3 m/s. Due to these characteristics, for our MHS layout, we used belt conveyors for transporting panels.

*Figure 1 Curved Belt Conveyor [1]*

*Figure 2 Streight Belt Conveyor [2]*

- In the continuous flow of material, for continuous change in direction without changing the direction of travel, curved belt conveyors can be used. For small radii of curved conveyors, specially cut and vulcanized belts are important. To guide the curved belt, a roller chain that runs along the outer edge of the belt is used. We found curved conveyors useful in transporting the goods while maintaining the travel direction.

## 2. Accumulators

Accumulating conveyors are short conveyors that serve as a buffer by storing the product until the downstream operation has available capacity.

Accumulating roller conveyors are storage cum conveying units. Their operation is also quiet. They are easy to assemble and require less maintenance. One must make sure there is no accumulation pressure while transport. The accumulation conveyor that we used can store up to one panel at any given time before transporting it to further components. There are three different type of accumulation roller conveyors [3]:

a. Medium-pressure accumulation conveyor
b. Zero-pressure accumulation conveyor
c. Zero contact accumulation conveyor

In this project, we preferred Zero back pressure Accumulation conveyor, because one accumulator can hold one panel. The mechanical actuation is used to transfer the panels from the Accumulator to next operation equipment. The roller drive shuts down during the accumulation to keep the panel, which leads to minimal back pressure.

*Figure 3 Accumulator [4]*

## 3. Diverters

The important function of the diverter is to identify the incoming goods and then convey them into the required direction based on the requirement. There are different types of diverters like pusher, cross belt sorter, tilting tray sorter etc. We used a turntable to achieve this purpose.

*Figure 4 Diverters [5]*

It is a non-stopping diverter which can occupy one panel at any given time. To transfer panels in straight direction it takes 22 sec while to transfer goods in cross direction it takes 33 sec.

## 4. Identification possibilities and Sensors in the Material handling system

### a. Computer Vision:

Computer vision is a type of artificial intelligence that is used to identify panels while they are being transported on conveyor belts. Computer vision can count the number of panels and distinguish them from one another. It identifies the panels and stores the data in a computer using an algorithm [6]. Computer vision can obtain accurate panel dimensions using image recognition technology [7].

In this project, computer vision is primarily used to inspect the quality of the panels before sending them for further processing. Furthermore, computer vision was used to reduce errors in finished goods. Computer vision can also be used to sort the panels, routing data through sensors to ensure the right panel is delivered to the right working station.

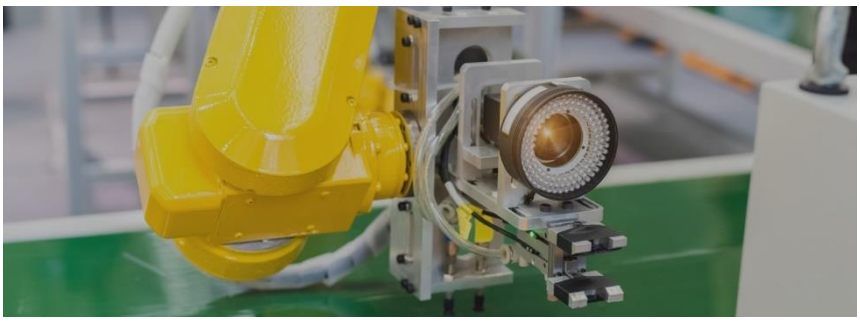

*Figure 5 Computer vision in manufacturing [8]*

### b. Near Infrared (NIR) Spectrometer:

NIR spectrometer uses light transmission to determine the microstructure of the panel. NIR works on a conveyor in such a way that it is installed above the conveyor height and the light of the sensor shines on the panel to provide precise measurements and structure of the panel. The measured data obtained from NIR helps in reducing output

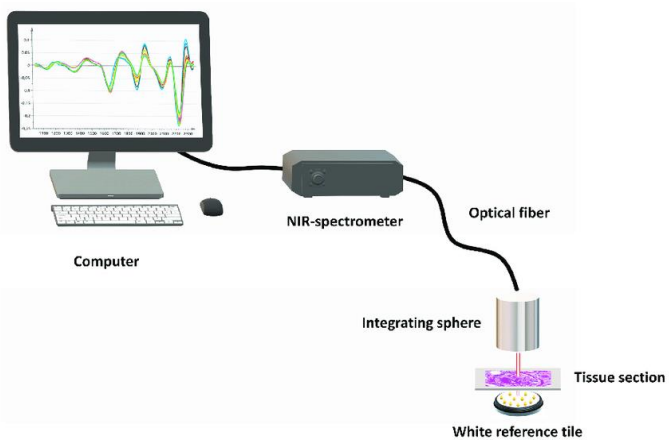


*Figure 6 Schematic representation of the near-infrared (NIR) spectroscopy-based setup [9]*

defects. This measured data is sent to the computer. The basic components of NIR are shown below:

The NIR spectrometer is mainly used to identify the microstructure of the panels, and it is capable of easily distinguishing the panels by detecting the microstructure.

c. Barcode Labeller:

This is one the possibility to differentiate the panels from their structure and properties**.** Barcode Labeller is a labelling system that prints the variable information about the panel on barcode and attaches that label to the panel. This method is used to obtain the information of the panel and helps to transfer the panel to further processing without any obstacles. For example, we could use Barcode Label printer Model 5300 pallet label printer or Alpha HS high speed label printer. The basic parts of the barcode machine are shown below:

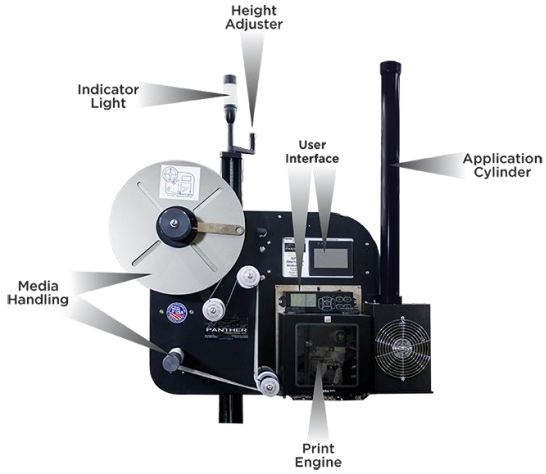


*Figure 7 Print and Apply labelling Systems [10]*

d. Barcode Scanner:

Following the Barcode labelling process, the next step is to scan the barcode and send the panel to the subsequent stations based on the information obtained from the barcode. In this project, a barcode scanner is usually placed in front of the diverters to communicate with the diverters and determine which panel should go to which station.

*Figure 8 VB14N Barcode Scanner Provides a Reliable and Flexible Solution [11]*

### e. Radio Frequency Identification (RFID):

Radio-Frequency Identification (RFID) is a wireless system that allows us to locate and monitor panels automatically. The mechanism involved is the use of electromagnetic fields to identify the panel structure, shape, and dimensions. RFID transfers the digital data to the computer, where it is stored in the cloud-based systems to monitor and track the real-time movement of the panels. For instance, Datamax H4606 printer and Zebra ZT610R printer could be used to print RFID.

*Figure 9 RFID scanner [12]*

### f. Automatic scanning station:

An automatic scanning station is also used to scan barcodes and sort the panels. Because it is flexible and provides high throughput rates, the automatic scanning station has its own set of advantages. The automatic scanning station can scan barcodes from all six sides of the goods and communicate with the diverters to automatically sort the panels.

*Figure 10 Automatic-barcode-scanning-station [13]*

### g. Proximity Sensor:

The proximity sensor is used to monitor the material flow in such a way that if the panels on the conveyors are misaligned, it immediately sends a signal to the system.

*Figure 11 Proximity Sensor* [14]

We can control the spilling of panels from the conveyors in this manner, reducing downtime and material waste. Sick WTB12-3P2411 1041422 could be an appropriate fit for the process.

### h. Photoelectric Presence Detector:

This type of sensor detects objects on the conveyor, preventing two panels at the sorting station from colliding. A Photoelectric Sensor is made up of two parts: an Emitter that emits light and a Receiver that receives light. When light is interrupted or reflected by a sensing object, the amount of light that reaches the receiver changes. This change is detected by the Receiver and converted to an electrical output. The majority of Photoelectric Sensors use infrared or visible light as their light source (usually red or green/blue for colour identification) [15]. Here Product families of G10, G6, or Simplesense could be used.

*Figure 12 photoelectric Presence Detector [16]*

### i. Limit switches:

Limit switches are precision switches installed on diverters to sense panel position and are triggered when there is a lack of contact. Limit switches are mainly used to ensure that the material flow is smooth and that panels do not fall to the ground. If there is an obstruction on the diverters or the conveyor line, the system is immediately shut down [17].

*Figure 13 Limit Switch [18]*

## Parameters

### 1. Working cycle time

Working cycle is a sequence of predefined tasks or activities which is repeated over time. Generally, the working cycle includes time for loading, movement of goods and unloading.

The equation for the working cycle time can be given by,

$$t_{wc} = \sum_{i=1}^{n} t_i$$

Importance of Working Cycle:

The working cycle is the basis for calculating the performance of working equipment, as well as a performance indicator for selecting drives and calculating the energy consumption.

### 2. Serving system

For the design process the basic assumption of stochastic flow scenario with random fluctuations as well as exponential serving rate should be considered.

A typical serving system is shown below.

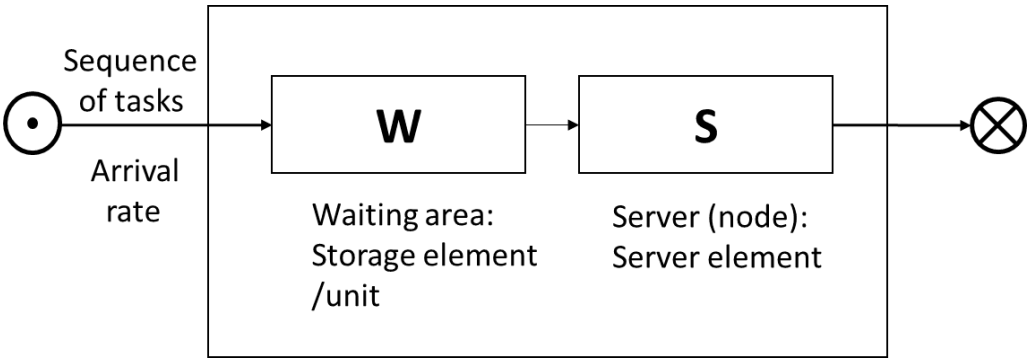


*Figure 14 Serving System*

It consists of a waiting area and server. The waiting area can have limited or unlimited storage capacity. In our layout accumulators and belt conveyors act as a waiting area. Belt conveyors are used as a waiting area for a server which has a maximum one waiting element. For a serving system containing more than one waiting element a series of accumulators can be employed. The serving system we employed has following characteristics:

a. Arrival process: Single arrival
b. Serving sequence: First In-First Out (FIFO)
c. Capacity of waiting area: Limited (here One panel)
d. Serving process: single server and no pause

In our layout we incorporated multiple serving systems with potential servers as diverters, CDP workstations and manual workstations.

## 3. Required throughput and throughput limit

Required throughput ($Q_{req}$): It is the throughput needed for the material flow system. Throughput limit ($Q_{lim}$): It is the theoretical throughput of the component.

The material handling system must always satisfy following condition,

$$Q_{lim} \geq Q_{req}$$

Since we used a continuous belt conveyor, the velocity of the conveyor and spacing between two panels should be taken into consideration for calculation of throughput.

$$Q = M. \frac{V}{x}$$

Where, Q = throughput, qty/hour
V = speed of the conveyor, m/s
x = spacing between two panels, m
M = 1 panel, qty

## 4. Utilisation

Utilisation tells us about the usage of the different MHS elements while they operate.

The optimum utilisation may look like below,

*Table 1 Utilisation*

| Serving rate, μ | Server utilisation, ρ | Waiting length/time |
|---|---|---|
| Low | high → good | big → bad |
| High | low → bad | small → good |

Utilisation can be calculated by using formula given below,

$$\rho = \frac{Q_{req}}{Q_{lim}}$$

## 5. Number of tasks

At any given time, the number of tasks is the total number of goods present in the serving system. Out of these goods few are handled by the server while others are handled by the waiting area. For our layout, since only one panel could be handled by a server, the remaining panels (tasks) were handled by a waiting area. 85% of blockage free operation should always be maintained. We used this as a reference in the probability distribution table to calculate the number of tasks in a serving system.

$$P\ (n=k) = \rho^k.\ (1-\rho)$$

## 6. Mean waiting length

Once we have calculated the number of tasks in the serving system, the mean waiting should be calculated. A typical formula to calculate mean waiting length is given below,

$$M(W) = \frac{\rho^2}{(1-\rho)}$$

It simply means the length of the waiting area which holds several tasks. Theoretically, it can be achieved by adding the length of each panel and the spacing between them.

## 7. Cold and hot redundancy

The cold and hot redundancies are the non-operational and the operational conditions of the material handling systems respectively. They generally occur when two parallel MHS lines emerge from one diverter. During operation, if either of these lines fail to operate while the other line can still carry the required numbers of panels to meet the throughput requirement, then it is called cold redundancy. In hot redundancy, if either of the lines fails then the required throughput would never be achieved. We identified hot redundancy for our chosen layouts.

## 8. Power consumption

Once both the layouts are designed according to the requirements, power is calculated for belt conveyors of the material handling system. Power consumption can be calculated by using different parameters like length and mass of belt conveyor, drive efficiency, meter weights of panels, idlers, belts, and motion resistance in belt etc.

# LAYOUT 1: LION

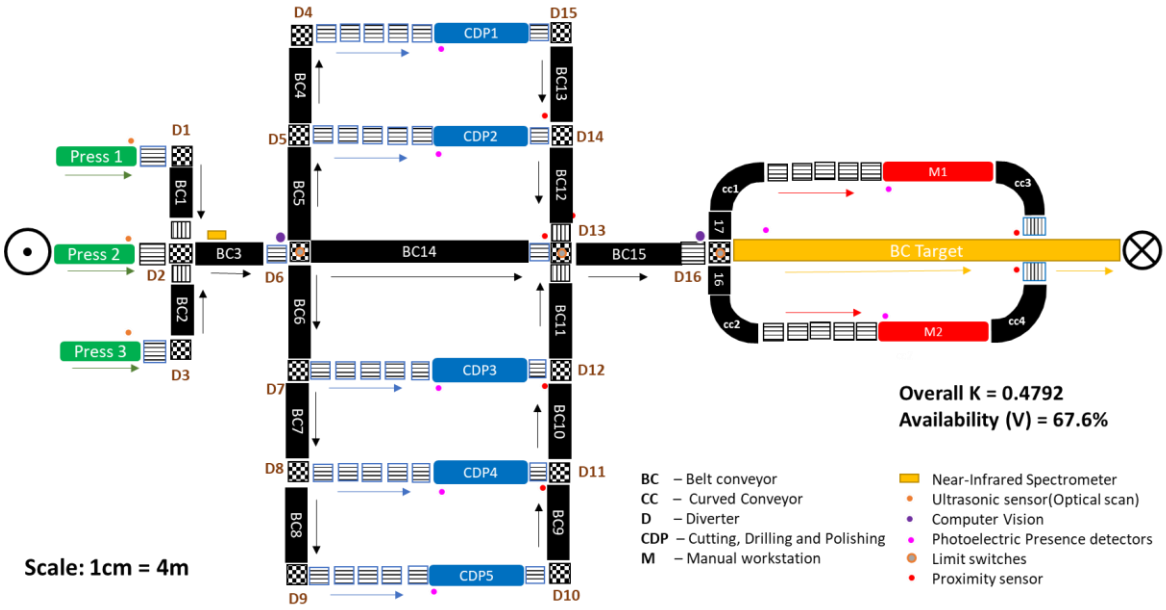


*Figure 15 Layout 1 Lion*

We considered three pressing stations, five CDP stations, and two manual stations to meet the required overall throughput of 50 pallets per hour. We considered all conveyors to be Belt conveyors, denoted as 'BC' on the layout, and all accumulators to be Roller conveyors, denoted as 'AC' on the technical block diagram.

First, the Pallets exit all three Pressing stations and make their way to diverter D2 via BC 1 and BC2. After reaching the Diverter D2, the pallets move along the BC3 while passing through the Near-Infrared Spectrometer NIR ▬, which uses light transmission to determine the microstructure of the panel, as each panel is unique, as stated in the task. This measured data is then sent to computer vision●. Computer vision● is installed just before the diverter D6, where it identifies the incoming panels, counts the pallets, distinguishes them from one another, and informs the diverter D6 about where to divert the pallets further. This Diverter receives information about each pallet and where it should be sent based on the pre-set required throughput.

So, the Diverter D6 distributes the incoming pallets with the condition that 75% of the total pallets coming from the press go to CDP stations for further processing, and the remaining pallets go to the warehouse via BC14. Also, the 15% of total pallets that must go directly to manual stations without passing through CDPs travel along BC14. Following that, pallets from D6 travel along BC5 and BC6 to CDP1, 2, 3, 4, and 5 respectively. This Diverter also has a limit switch to keep the orientations of the incoming pallets in the correct position, avoiding errors or blockage. Every CDP station is outfitted with photoelectric presence detectors● to detect incoming pallets and provide feedback to the diverters. According to our calculations, the number of tasks in the waiting area for each CDP when used as a server was 5, so 5 accumulators were used before each CDP.

All pallets from their respective CDP stations arrive at the merger D13 via BC 9-13 after being processed in the CDPs. Now, at this merger D13, the pallets from all CDP stations and the pallets directly from press stations that pass along the conveyor BC14 pass along to the conveyor BC15, which has the computer vision mounted at the end, where the computer vision acknowledges and identifies the pallets again and provides this information to the Diverter D16 about where to divert the pallets further.

Furthermore, this diverter sends the panels to either manual stations 1 and 2 for further processing via curved conveyors CC1 and CC2, or to the warehouse via the BC target. According to our calculations, the number of tasks in the waiting area for each Manual Station when used as a server was 5. As a result, 5 accumulators were used before each of the Manual stations, and each of those is equipped with photoelectric presence detectors similar to the CDP stations.

Wherever possible, accumulators were placed before diverters in the layout. This decision was reached by treating the diverters as a server and calculating the number of tasks in the waiting area for that server. If the number of tasks was 0 or one, we considered the conveyor before the diverter to be the waiting area, and if the number was greater than one, we added the necessary accumulators. Furthermore, proximity sensors are installed at various points throughout the layout to prevent pallets from colliding and to ensure a smooth, uninterrupted material flow. We identified hot redundancy for layout 1. In hot redundancy, if the two or more parallel lines of MHS are operating and if either of them fails then the required throughput would never be achieved. In our layout, all the 5 CDPs are carrying around an equal number of panels which are necessary to meet the throughput requirement. Therefore, if either of these 5 CDPs fails and cannot process the panels, CDP throughput would never be achieved. Similarly, for manual workstations, if either of these two manual workstations fails, the required manual throughput would never be achieved.

## Technical Block Diagram

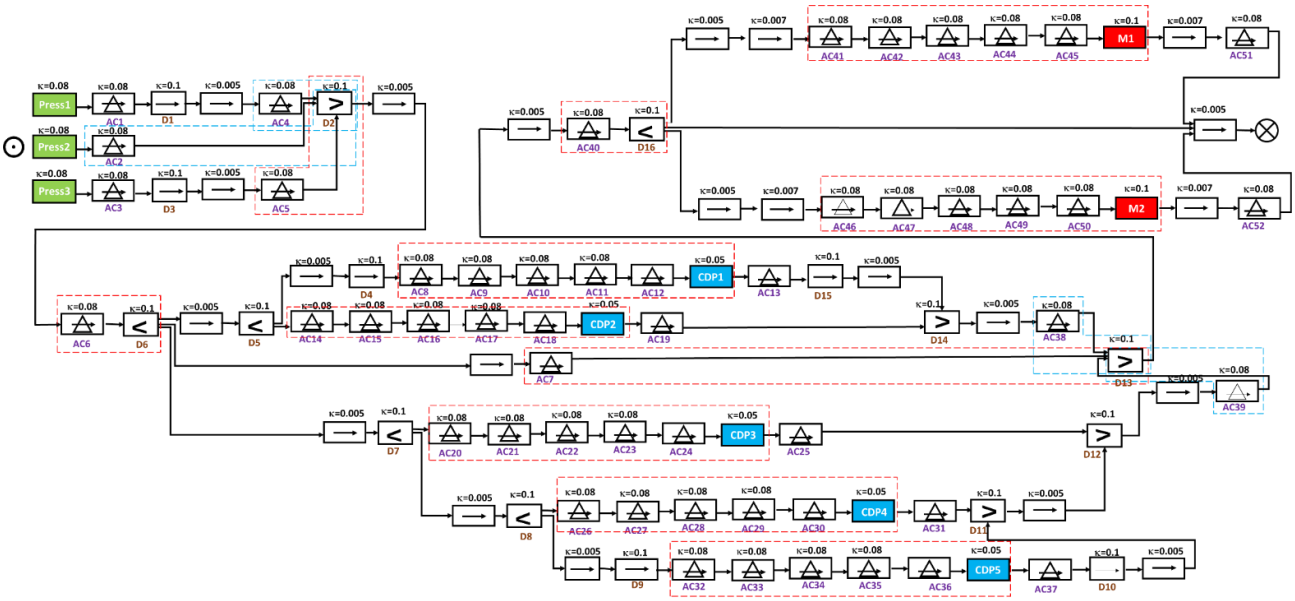


*Figure 16 Layout 1 Technical Block Diagram*

## Calculations for each element used:

**1. Theoretical Calculations (Belt Conveyor 1):**

A. Utilization (ρ) for $BC_1$:

$$\rho = Q_{Req} / Q_{lim}$$

Where, $Q_{Req}$ = Required Throughput

$Q_{lim}$= Throughput limit

Required Throughput ($Q_{Req}$) = 17 Panels/hour

Throughput limit ($Q_{lim}$) = $\frac{V}{X}$

Where, V = Velocity of the Conveyor (m/s) = 0.1 m/s

X = Good Pitch = Length of one good + Distance between two goods

= (2000 + 1200)

= 3200 mm

Therefore, $Q_{lim}$ = 0.1/3200 = 112.5 panels/hour

$$\rho = Q_{Req} / Q_{lim}$$

$$= 17/112.5 = 0.1511$$

$$\boxed{\rho = 0.1511}$$

B. Mean Queueing Length or Mean waiting area (M (W)):

$$M(W) = \frac{\rho^2}{1-\rho}$$

$$= 0.1511^2/ (1-0.1511)$$

$$= 0.02689$$

$$\boxed{M(W) = 0.02689}$$

**2. Theoretical Calculations (Curved Conveyor 1):**

A. Utilization (ρ) for $CC_1$:

$$\rho = Q_{Req} / Q_{lim}$$

Where, $Q_{Req}$ = Required Throughput

$Q_{lim}$= Throughput limit

Required Throughput ($Q_{Req}$) = 3.825 Panels/hour

Throughput limit ($Q_{lim}$) = $\frac{V}{X}$

Where, V = Velocity of the Conveyor (m/s) = 0.1 m/s

X = Good Pitch

= Length of one good + Distance between two goods

= (2000 + 1200)

= 3200 mm

Therefore, $Q_{lim}$ = 0.1/3200 = 112.5 panels/hour

$\rho = Q_{Req} / Q_{lim}$

= 3.825/112.5 = 0.034

$\boxed{\rho = 0.034}$

B. Mean Queueing Length or Mean waiting area (M (W)):

$$M(W) = \frac{\rho^2}{1-\rho}$$

= 0.034^2/ (1-0.034)

= 0.0011

$\boxed{M(W) = 0.0011}$

**3. Theoretical Calculations (Accumulator 1):**

A. Utilization (ρ) for $AC_1$:

$$\rho = Q_{Req} / Q_{lim}$$

Where, $Q_{Req}$ = Required Throughput

$Q_{lim}$ = Throughput limit

Required Throughput ($Q_{Req}$) = 17 Panels/hour

Throughput limit ($Q_{lim}$) = $\frac{V}{X}$

Where, V = Velocity of the Conveyor (m/s) = 0.1 m/s

X = Length of one good

= 2000 mm

Therefore, $Q_{lim}$ = 0.1/2000 = 180 panels/hour

$$\rho = Q_{Req} / Q_{lim}$$

$$= 17/180 = 0.094$$

$$\boxed{\rho = 0.0944}$$

B. Mean Queueing Length or Mean waiting area (M (W)):

$$M(W) = \frac{\rho^2}{1-\rho}$$

$$= 0.0944^2 / (1-0.0944)$$

$$= 0.0098$$

$$\boxed{M(W) = 0.0098}$$

**4. Theoretical Calculations (Diverter i.e., Turning Table 2):**

A. Utilization (ρ) for $D_2$:

$$\rho = Q_{Req} / Q_{lim}$$

Where, $Q_{Req}$ = Required Throughput

$Q_{lim}$= Throughput limit = $1/T_{WC}$

Working cycle time $T_{WC} = (\frac{1}{3} \times \text{Straight transfer time}) + (\frac{2}{3} \times \text{cross transfer time})$

$$= (\frac{1}{3} \times 22) + (\frac{2}{3} \times 33)$$

$$= 29.33 \text{ sec}$$

Required Throughput ($Q_{Req}$) = 51 Panels/hour

Throughput limit ($Q_{lim}$) = $1/T_{WC}$

$$= 1/29.33$$

$$= 122.72 \text{ Panels/hour}$$

$$\rho = Q_{Req} / Q_{lim}$$

$$= 51/122.72 = 0.4155$$

$$\boxed{\rho = 0.4155}$$

B. Mean Queueing Length or Mean waiting area (M (W)):

$$M(W) = \frac{\rho^2}{1-\rho}$$

$$= 0.4155^2 / (1-0.4155)$$

$$= 0.2955$$

$$\boxed{M(W) = 0.2955}$$

C. Number of Tasks to allow 85% blockage free operation (K):

At $\rho = 0.4155$

Probability distribution table:

$$P(n = K) = \rho^{K}. (1- \rho)$$

*Table 2 Probability distribution table - Diverters (Layout-1)*

| ρ | K | P(W) | Sum |
|---|---|---|---|
| 0.4155 | 0 | 0.5845 | 0.5845 |
| 0.4155 | 1 | 0.24286 | 0.82736 |
| 0.4155 | 2 | 0.100908 | **0.928268** |

At 85%, Blockage free operation number of tasks that required in the waiting area of the serving system are K = 2 – 1 = 1.

Therefore, K = 1 represents that we have 1 task in the waiting area and 1 task in the server.

So, number of accumulators in the waiting area for $D_2 = 1$.

**5. Theoretical Calculations (Press1):**

A. Utilization (ρ) for $Press_1$:

$$\rho = Q_{Req} / Q_{lim}$$

Where, $Q_{Req}$ = Required Throughput

$Q_{lim}$= Throughput limit

Required Throughput ($Q_{Req}$) = 17 Panels/hour

Throughput limit ($Q_{lim}$) = 20 Panels/hour

$$\rho = Q_{Req} / Q_{lim}$$

$$= 17/20 = 0.85$$

$$\boxed{\rho = 0.85}$$

B. Mean Queueing Length or Mean waiting area (M (W)):

$$M(W) = \frac{\rho^2}{1-\rho}$$

$$= 0.85^2/ (1-0.85)$$

$$\boxed{M(W) = 4.8166}$$

## 6. Theoretical Calculations (CDP1):

A. Utilization (ρ) for $CDP_1$:

$$\rho = Q_{Req} / Q_{lim}$$

Where, $Q_{Req}$ = Required Throughput

$Q_{lim}$= Throughput limit

Required Throughput ($Q_{Req}$) = 7.65 Panels/hour

Throughput limit ($Q_{lim}$) = 10 Panels/hour

$$\rho = Q_{Req} / Q_{lim}$$

$$= 7.65/10 = 0.765$$

$$\boxed{\rho = 0.765}$$

B. Mean Queueing Length or Mean waiting area (M (W)):

$$M(W) = \frac{\rho^2}{1-\rho}$$

$$= 0.765^2/ (1-0.765)$$

$$\boxed{M(W) = 2.4903}$$

C. Number of Tasks to allow 85% blockage free operation (K):

At ρ = 0.765

Probability distribution table:

$$P(n = K) = \rho^K. (1- \rho)$$

*Table 3 Probability distribution table - CDP (Layout-1)*

| P | K | P(W) | Sum |
|---|---|---|---|
| 0.765 | 0 | 0.235 | 0.243 |
| 0.765 | 1 | 0.179775 | 0.422775 |
| 0.765 | 2 | 0.137528 | 0.560303 |
| 0.765 | 3 | 0.105209 | 0.665512 |
| 0.765 | 4 | 0.080485 | 0.745996 |
| 0.765 | 5 | 0.061571 | 0.807567 |
| 0.765 | 6 | 0.047102 | **0.854669** |

At 85%, Blockage free operation number of tasks that required in the waiting area of the serving system are K = 6 – 1 = 5.

Therefore, K = 5 represents that we have 5 tasks in the waiting area and 1 task in the server.

So, number of accumulators in the waiting area for $CDP_1$ = 5.

## 7. Theoretical Calculations (Manual 1):

A. Utilization (ρ) for $Manual_1$:

$$\rho = Q_{Req} / Q_{lim}$$

Where, $Q_{Req}$ = Required Throughput

$Q_{lim}$= Throughput limit

Required Throughput ($Q_{Req}$) = 3.825 Panels/hour

Throughput limit ($Q_{lim}$) = 5 Panels/hour

$$\rho = Q_{Req} / Q_{lim}$$

$$= 3.825/5 = 0.765$$

$$\boxed{\rho = 0.765}$$

B. Mean Queueing Length or Mean waiting area (M (W)):

$$M(W) = \frac{\rho^2}{1-\rho}$$

$$= 0.765^2/ (1-0.765)$$

$$\boxed{M(W) = 2.4903}$$

C. Number of Tasks to allow 85% blockage free operation (K):

At ρ = 0.765

Probability distribution table:

$$P(n = K) = \rho^K . (1- \rho)$$

*Table 4 Probability distribution table - Manual (Layout-1)*

| P | K | P(W) | Sum P(W) |
|---|---|---|---|
| 0,765 | 0 | 0,235 | 0,243 |
| 0,765 | 1 | 0,179775 | 0,422775 |
| 0,765 | 2 | 0,137528 | 0,560303 |
| 0,765 | 3 | 0,105209 | 0,665512 |
| 0,765 | 4 | 0,080485 | 0,745996 |
| 0,765 | 5 | 0,061571 | 0,807567 |
| 0,765 | 6 | 0,047102 | 0,854669 |

At 85%, Blockage free operation number of tasks that required in the waiting area of the serving system are K = 6 – 1 = 5.

Therefore, K = 5 represents that we have 5 tasks in the waiting area and 1 task in the server.

So, number of accumulators in the waiting area for $Manual_1$ = 5.

**8. Availability (V):**

$$\text{Availability } V = \frac{1}{1+K}$$

Where, K = Failure factor

If the elements are in parallel:

$$V = 1 - \prod_{i=1}^{n}\left(1 - \frac{1}{1+Ki}\right)$$

$$\text{Then } K = \frac{1}{V} - 1$$

If the elements are in series: $K = K_1 + K_2 + K_3 + \text{----------} + K_i$

From technical diagram, Overall failure factor K = 0.4792.

$$V = \frac{1}{1+0.4792}$$

$$= 67.6\ \%$$

$$\boxed{V = 67.6\ \%}$$

**9. Power Consumption (P) for BC1:**

Given Parameters for Belt Conveyor:

Mass of the Belt conveyor $m_{Belt} = 4\ Kg/m^2$

$$\mu_g = 0{,}3$$

Moving masses in return strand of belt conveyor

$$M_{IdlerBC} = 5\ Kg$$

$$L_{IdlerBC} = 3m$$

Drive efficiency: $n_{driveBC} = 0.91$

$$g = 9.81\ m/s^2$$

Panel Parameters:

$$m_{Panel} = 120\ Kg$$

$$l_{Panel} = 2m$$

Belt Parameters from Layout:

Length: $L_{Belt} = 5.04$ m

Width: B = 2.2 m

Speed: $V_{BC} = 0.1\ m/s^2$

Start-up time: $t_{aBC} = 3$ sec

Meter weights:

$$q_{Panel} = (m_{Panel} \times g) / l_{Panel}$$

$$= (120 \times 9.81) / 2$$

$$= 588.6 \text{ N/m}$$

$$q_{IdlerBC} = (m_{IdlerBC} \times g) / l_{IdlerBC}$$

$$= (5 \times 9.81) / 3$$

$$= 16.35 \text{ N/m}$$

$$q_{Belt} = m_{Belt} \times B \times g$$

$$= 4 \times 2.2 \times 9.81$$

$$= 86.33 \text{ N/m}$$

Power Consumption of Belt Conveyor:

Motion resistances in return strand

$$F_{H1} = q_{Belt} \times L_{Bc} \times \cos(\sigma_{BC}) + q_{Idler} \times L_{Bc} \times 0.02 = 86.33 \times 5.04 \times \text{Cos}(0^o) + 16.35 \times 5.04 \times 0.02$$

$$= 132.18 \text{ N}$$

$$F_{St1} = - (q_{Belt} \times L_{Bc} \times \sin(\sigma_{BC})) = 0$$

Motion resistances in conveying strand:

$$F_{H2} = (q_{Panel} + q_{Belt}) \times L_{Bc} \times \cos(\sigma_{BC}) \times \mu_g = (588.6 + 86.33) \times 5.04 \times \text{Cos}(0^o) \times 0.3$$

$$= 1020.49 \text{ N}$$

$$F_{St2} = - ((q_{Panel} + q_{Belt}) \times L_{Bc} \times \sin(\sigma_{BC})) = 0$$

$$F_{totalBC} = F_{H1} + F_{st1} + F_{H2} + F_{st2} = 1152.67 \text{ N}$$

$$a_{aBC} = V_{BC} / t_{aBC} = 0.0333 \text{ m/s}$$

$$F_{AccBC} = 2 \times L_{BC} \times a_{aBC} \times ((0.9\, q_{IdlerBC} / g) + (q_{Panel} / g) + (q_{Belt} / g))$$

$$= 23.52 \text{ N}$$

$(F_{totalBC} + F_{AccBC}) / F_{totalBC} = 1.0205$ within the range of starting factors from 1.2 to 1.7

Therefore,

$$P_{MBC} = (F_{totalBC} \times V_{BC}) / n_{driveBC}$$

$$= (1152.67 \times 0.1) / 0.91 = 127 \text{ W}$$

$$\boxed{P_{MBC} = 127 \text{ W}}$$

## 10. Power Consumption (P) for Accumulator (AC):

Given Parameters for Belt Conveyor:

Moving masses in Roller conveyor

$m_{idlerRC} = 5$ Kg

$d_{shaftRC} = 10$ mm

$d_{idlerRC} = 90$ mm

$l_{idlerRC} = 150$ mm

Drive efficiency: $n_{driveRC} = 0.91$

$g = 9.81$ m/s$^2$

Panel Parameters:

$m_{Panel} = 120$ Kg

$l_{Panel} = 2$m

Roller conveyor parameters:

Length: $L_{RC} = 2$ m

Width: $B = 2.2$ m

Speed: $V_{RC} = 0.1$ m/s$^2$

Start-up time: $t_{aRC} = 3$ sec

Meter weights:

$$q_{Panel} = (m_{Panel} \times g) / l_{Panel}$$
$$= (120 \times 9.81) / 2$$
$$= 588.6 \text{ N/m}$$

$$q_{IdlerBC} = (m_{IdlerBC} \times g) / l_{IdlerBC}$$
$$= (5 \times 9.81) / 3$$
$$= 16.35 \text{ N/m}$$

$$q_{Belt} = m_{Belt} \times B \times g$$
$$= 4 \times 2.2 \times 9.81$$
$$= 86.33 \text{ N/m}$$

Power Consumption of Roller Conveyor:

$f_R = 2$ mm for steel/plastic contact

$\mu_b = 0.003$ for Roller bearings

$\mu_r = (2 / d_{idlerRC}) \times (f_R + \mu_b \times d_{shaftRC} \times 0.5)$

$= 0.0448$

$F_{fric} = (q_{panel} \times L_{Rc} \times \mu_r + q_{IdlerRC} \times L_{Rc} \times \mu_r)$

$= 82$ N

$F_{totalRC} = F_{fric} = 81.9971$ N

$a_{aRC} = V_{RC} / t_{aRC} = 0.0333$ m/s$^2$

$F_{AccRC} = L_{RC} \times a_{aRC} \times ((0.9\ q_{IdlerRC} / g) + (q_{Panel} / g))$

$= 6$ N

$(F_{totalRC} + F_{AccRC}) / F_{totalRC} = 1.0732$, within the range of starting factors from 1.2 to 1.7

Therefore,

$P_{MRC} = (F_{totalRC} \times V_{RC}) / n_{total}$

Where $n_{total} = n_{driveRC} \times n_{trans}$^(n-1)

$n_{trans} = 0.88$

$n = L_{RC} / (2.\ L_{idlerRC}) = 6.6667$ every second roller is driven

$n_{total} = 0.441$

$$\boxed{P_{MRC} = 19 \text{ W}}$$

## Overall results (Layout 1):

*Table 5 Utilisation and Waiting area table (Layout-1)*

| Sr.no | Elements | Q(lim.) pallets/hour | Q(Req.) pallets/hour | ρ | M(w) |
|---|---|---|---|---|---|
| 1 | BC1 | 112.5 | 51 | 0.453333333 | 0.375934959 |
| 2 | BC2 | 112.5 | 12.75 | 0.113333333 | 0.014486216 |
| 3 | BC3 | 112.5 | 38.25 | 0.34 | 0.175151515 |
| 4 | BC4 | 112.5 | 7.65 | 0.068 | 0.004961373 |
| 5 | BC5 | 112.5 | 15.3 | 0.136 | 0.021407407 |
| 6 | BC6 | 112.5 | 22.95 | 0.204 | 0.052281407 |
| 7 | BC7 | 112.5 | 30.6 | 0.272 | 0.101626374 |
| 8 | BC8 | 112.5 | 38.25 | 0.34 | 0.175151515 |
| 9 | BC9 | 112.5 | 30.6 | 0.272 | 0.101626374 |
| 10 | BC10 | 112.5 | 22.95 | 0.204 | 0.052281407 |
| 11 | BC11 | 112.5 | 15.3 | 0.136 | 0.021407407 |
| 12 | BC12 | 112.5 | 7.65 | 0.068 | 0.004961373 |
| 13 | BC13 | 112.5 | 12.75 | 0.113333333 | 0.014486216 |
| 14 | BC14 | 112.5 | 7.65 | 0.068 | 0.004961373 |
| 15 | BC15 | 112.5 | 3.825 | 0.034 | 0.001196687 |
| 16 | BC16 | 112.5 | 38.25 | 0.34 | 0.175151515 |
| 17 | BC17 | 112.5 | 42.075 | 0.374 | 0.223444089 |
| 18 | BC18 | 112.5 | 12.75 | 0.113333333 | 0.014486216 |
| 19 | BC19 | 112.5 | 38.25 | 0.34 | 0.175151515 |
| 20 | CC1 | 112.5 | 17 | 0.151111111 | 0.02689936 |
| 21 | CC2 | 112.5 | 17 | 0.151111111 | 0.02689936 |
| 22 | CC3 | 112.5 | 38.25 | 0.34 | 0.175151515 |
| 23 | CC4 | 112.5 | 12.75 | 0.113333333 | 0.014486216 |
| 24 | AC1 | 180 | 17 | 0.094444444 | 0.009850034 |
| 25 | AC2 | 180 | 17 | 0.094444444 | 0.009850034 |
| 26 | AC3 | 180 | 17 | 0.094444444 | 0.009850034 |
| 27 | AC4 | 180 | 17 | 0.094444444 | 0.009850034 |
| 28 | AC5 | 180 | 17 | 0.094444444 | 0.009850034 |
| 29 | AC6 | 180 | 51 | 0.283333333 | 0.112015504 |
| 30 | AC7 | 180 | 7.65 | 0.0425 | 0.001886423 |
| 31 | AC8 | 180 | 7.65 | 0.0425 | 0.001886423 |
| 32 | AC9 | 180 | 7.65 | 0.0425 | 0.001886423 |
| 33 | AC10 | 180 | 7.65 | 0.0425 | 0.001886423 |
| 34 | AC11 | 180 | 7.65 | 0.0425 | 0.001886423 |
| 35 | AC12 | 180 | 7.65 | 0.0425 | 0.001886423 |
| 36 | AC13 | 180 | 7.65 | 0.0425 | 0.001886423 |
| 37 | AC14 | 180 | 7.65 | 0.0425 | 0.001886423 |
| 38 | AC15 | 180 | 7.65 | 0.0425 | 0.001886423 |
| 39 | AC16 | 180 | 7.65 | 0.0425 | 0.001886423 |
| 40 | AC17 | 180 | 7.65 | 0.0425 | 0.001886423 |
| 41 | AC18 | 180 | 7.65 | 0.0425 | 0.001886423 |
| 42 | AC19 | 180 | 7.65 | 0.0425 | 0.001886423 |
| 43 | AC20 | 180 | 7.65 | 0.0425 | 0.001886423 |

| | | | | | |
|---|---|---|---|---|---|
| 44 | AC21 | 180 | 7.65 | 0.0425 | 0.001886423 |
| 45 | AC22 | 180 | 7.65 | 0.0425 | 0.001886423 |
| 46 | AC23 | 180 | 7.65 | 0.0425 | 0.001886423 |
| 47 | AC24 | 180 | 7.65 | 0.0425 | 0.001886423 |
| 48 | AC25 | 180 | 7.65 | 0.0425 | 0.001886423 |
| 49 | AC26 | 180 | 7.65 | 0.0425 | 0.001886423 |
| 50 | AC27 | 180 | 7.65 | 0.0425 | 0.001886423 |
| 51 | AC28 | 180 | 7.65 | 0.0425 | 0.001886423 |
| 52 | AC29 | 180 | 7.65 | 0.0425 | 0.001886423 |
| 53 | AC30 | 180 | 7.65 | 0.0425 | 0.001886423 |
| 54 | AC31 | 180 | 7.65 | 0.0425 | 0.001886423 |
| 55 | AC32 | 180 | 7.65 | 0.0425 | 0.001886423 |
| 56 | AC33 | 180 | 7.65 | 0.0425 | 0.001886423 |
| 57 | AC34 | 180 | 7.65 | 0.0425 | 0.001886423 |
| 58 | AC35 | 180 | 7.65 | 0.0425 | 0.001886423 |
| 59 | AC36 | 180 | 7.65 | 0.0425 | 0.001886423 |
| 60 | AC37 | 180 | 3.825 | 0.02125 | 0.000461367 |
| 61 | AC38 | 180 | 3.825 | 0.02125 | 0.000461367 |
| 62 | AC39 | 180 | 3.825 | 0.02125 | 0.000461367 |
| 63 | AC40 | 180 | 3.825 | 0.02125 | 0.000461367 |
| 64 | AC41 | 180 | 3.825 | 0.02125 | 0.000461367 |
| 65 | AC42 | 180 | 3.825 | 0.02125 | 0.000461367 |
| 66 | AC43 | 180 | 3.825 | 0.02125 | 0.000461367 |
| 67 | AC44 | 180 | 3.825 | 0.02125 | 0.000461367 |
| 68 | AC45 | 180 | 3.825 | 0.02125 | 0.000461367 |
| 69 | AC46 | 180 | 3.825 | 0.02125 | 0.000461367 |
| 70 | AC47 | 180 | 12.75 | 0.070833333 | 0.005399851 |
| 71 | D1 | 122.72 | 51 | 0.415580183 | 0.295518535 |
| 72 | D2 | 130.9 | 51 | 0.38961039 | 0.248687483 |
| 73 | D3 | 109.09 | 7.65 | 0.070125584 | 0.005288453 |
| 74 | D4 | 130.9 | 15.3 | 0.116883117 | 0.015469824 |
| 75 | D5 | 130.9 | 22.95 | 0.175324675 | 0.03727375 |
| 76 | D6 | 130.9 | 30.6 | 0.233766234 | 0.071318512 |
| 77 | D7 | 130.9 | 38.25 | 0.292207792 | 0.120636244 |
| 78 | D8 | 130.9 | 38.25 | 0.292207792 | 0.120636244 |
| 79 | D9 | 130.9 | 30.6 | 0.233766234 | 0.071318512 |
| 80 | D10 | 130.9 | 22.95 | 0.175324675 | 0.03727375 |
| 81 | D11 | 130.9 | 15.3 | 0.116883117 | 0.015469824 |
| 82 | D12 | 130.9 | 7.65 | 0.058441558 | 0.003627407 |
| 83 | D13 | 130.9 | 38.25 | 0.292207792 | 0.120636244 |
| 84 | D14 | 130.9 | 7.65 | 0.058441558 | 0.003627407 |
| 85 | D15 | 109.09 | 3.825 | 0.035062792 | 0.001274072 |
| 86 | D16 | 130.09 | 38.25 | 0.294027212 | 0.12245798 |
| 87 | D17 | 130.09 | 42.075 | 0.323429933 | 0.154613582 |
| 88 | D18 | 122.72 | 51 | 0.415580183 | 0.295518535 |
| 89 | Press 1 | 20 | 17 | 0.85 | 4.816666667 |
| 90 | Press 2 | 20 | 17 | 0.85 | 4.816666667 |
| 91 | Press 3 | 20 | 17 | 0.85 | 4.816666667 |

| | | | | | |
|---|---|---|---|---|---|
| 92 | CDP 1 | 10 | 7.65 | 0.765 | 2.490319149 |
| 93 | CDP 2 | 10 | 7.65 | 0.765 | 2.490319149 |
| 94 | CDP 3 | 10 | 7.65 | 0.765 | 2.490319149 |
| 95 | CDP 4 | 10 | 7.65 | 0.765 | 2.490319149 |
| 96 | CDP 5 | 10 | 7.65 | 0.765 | 2.490319149 |
| 97 | M1 | 5 | 3.825 | 0.765 | 2.490319149 |
| 98 | M2 | 5 | 3.825 | 0.765 | 2.490319149 |

*Table 6 Power Consumption (Layout-1)*

| Sr.no | Elements | Power Consumption (W) |
|---|---|---|
| 1 | BC1 | 141 |
| 2 | BC2 | 2300 |
| 3 | BC3 | 151 |
| 4 | BC4 | 261 |
| 5 | BC5 | 261 |
| 6 | BC6 | 261 |
| 7 | BC7 | 261 |
| 8 | BC8 | 261 |
| 9 | BC9 | 261 |
| 10 | BC10 | 261 |
| 11 | BC11 | 261 |
| 12 | BC12 | 261 |
| 13 | BC13 | 261 |
| 14 | BC14 | 261 |
| 15 | BC15 | 261 |
| 16 | BC16 | 261 |
| 17 | BC17 | 261 |
| 18 | BC18 | 110 |
| 19 | BC19 | 560 |
| 20 | CC1 | 212 |
| 21 | CC2 | 212 |
| 22 | CC3 | 212 |
| 23 | CC4 | 212 |
| 24 | AC | 19 |

*Table 7 Waiting area (Layout-1)*

| Sr.no | Elements | K (Waiting area) |
|---|---|---|
| 1 | D1 | 1 |
| 2 | D2 | 1 |
| 3 | D3 | 0 |
| 4 | D4 | 0 |
| 5 | D5 | 0 |
| 6 | D6 | 0 |
| 7 | D7 | 0 |
| 8 | D8 | 0 |
| 9 | D9 | 0 |

| | | |
|---|---|---|
| 10 | D10 | 0 |
| 11 | D11 | 0 |
| 12 | D12 | 0 |
| 13 | D13 | 0 |
| 14 | D14 | 0 |
| 15 | D15 | 0 |
| 16 | D16 | 0 |
| 17 | D17 | 0 |
| 18 | D18 | 1 |
| 19 | CDP 1 | 5 |
| 20 | CDP 2 | 5 |
| 21 | CDP 3 | 5 |
| 22 | CDP 4 | 5 |
| 23 | CDP 5 | 5 |
| 24 | M1 | 5 |
| 25 | M2 | 5 |

Total Power consumption = 5054 W.

# LAYOUT 2: EAGLE

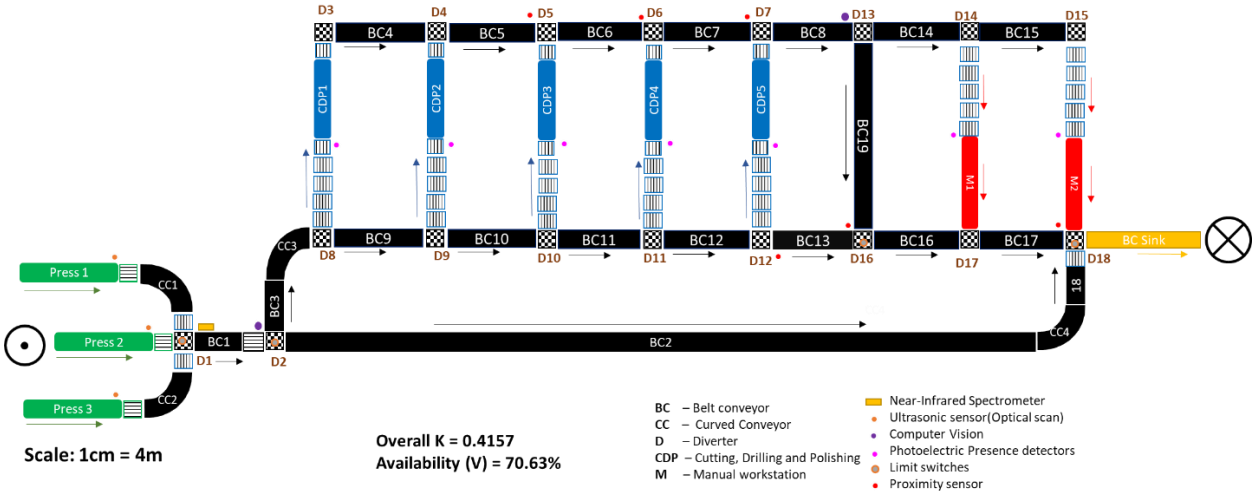


*Figure 17 Layout 2 Eagle*

Similar to the first layout, we considered three pressing stations, five CDP stations, and two manual stations to meet the required overall throughput of 50 pallets per hour. We considered all conveyors to be Belt conveyors, denoted as 'BC' on the layout, and all accumulators to be Roller conveyors, denoted as 'AC' on the technical block diagram.

First, the Pallets exit all three Pressing stations and make their way to Diverter D1 via Curved conveyors, CC1, and CC2. After reaching the Diverter D1, the pallets move along the BC1 while passing through the Near-Infrared Spectrometer NIR ▭, which uses light transmission to determine the microstructure of the panel, as each panel is unique, as stated in the task. This measured data is then sent to computer vision•. Computer vision• is installed just before the diverter D2, where it identifies the incoming panels, counts the pallets, distinguishes them from one another, and informs the diverter D2 about where to divert the pallets further. This Diverter receives information about each pallet and where it should be sent based on the pre-set required throughput.

So, the Diverter D2 distributes the incoming pallets with the condition that 75% of the total pallets coming from the press go to CDP stations for further processing and the remaining pallets go to the warehouse via BC2. Also, the 15% of total pallets that must go directly to manual stations without passing through CDPs travel BC4-8-14-15. Following that, pallets from D2 travel along BC3 and CC3 to reach D8 where the pallets are diverted to CDP1 and similarly the diverters 9, 10, 11, and 12 diverts the incoming pallets to CDP 2, 3, 4, and 5 respectively. These Diverters also have a limit switch to keep the orientations of the incoming pallets in the correct position, avoiding errors or blockage. Every CDP station is outfitted with photoelectric presence detectors• to detect incoming pallets and provide feedback to the diverters. According to our calculations, the number of tasks in the waiting area for each CDP when used as a server was 5, so 5 accumulators were used before each CDP.

All pallets from their respective CDP stations arrive at the merger D13 after being processed in the CDPs. Now, at this merger D13, the pallets from all CDP stations pass along to the conveyor BC14, before which the computer vision• that is mounted at the end of BC8,

acknowledges and identifies the pallets again and provides this information to the Diverter D13 about where to divert the pallets further i.e., to Manual stations or to warehouse. According to our calculations, the number of tasks in the waiting area for each Manual Station when used as a server was 5. As a result, 5 accumulators were used before each of the Manual stations, and each of those is equipped with photoelectric presence detectors similar to the CDP stations.

Wherever possible, accumulators were placed before diverters in the layout. This decision was reached by treating the diverters as a server and calculating the number of tasks in the waiting area for that server. If the number of tasks was 0 or one, we considered the conveyor before the diverter to be the waiting area, and if the number was greater than one, we added the necessary accumulators. Furthermore, proximity sensors are installed at various points throughout the layout to prevent pallets from colliding and to ensure a smooth, uninterrupted material flow.

The other feature here in this layout is the **Belt conveyor BC13**. It is a non-operational conveyor that is represented in above figure. It would only become operational in case the conveyor BC2 becomes faulty so that the pallets could still directly go to the warehouse without having to pass through any of the CDPs or manual stations. Also, there is another possibility to satisfy the case that 15% of all the pallets must go directly to manual i.e., these pallets can move along the conveyor BC2, along with the pallets going to the warehouse (From press) and the diverter D18 can divert the pallets accordingly to either manual 2 or to warehouse.

## Technical Block Diagram

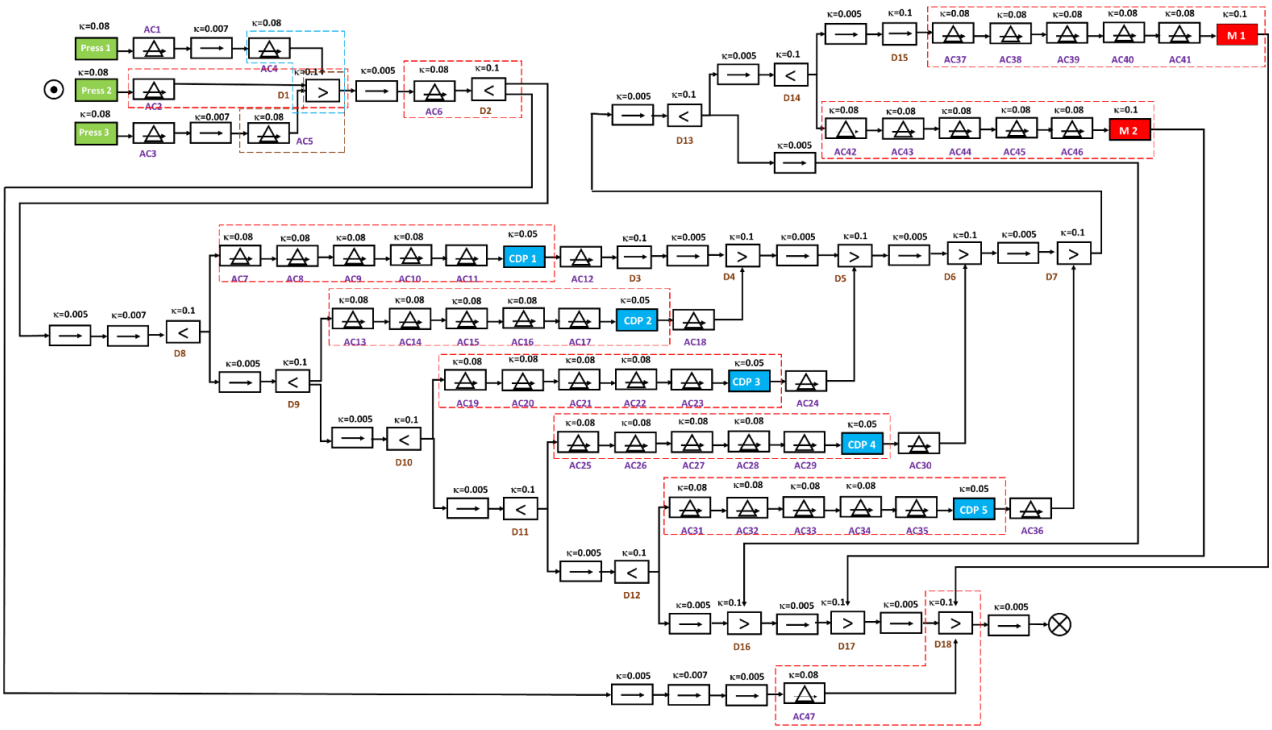


*Figure 18 Layout 2 Technical Block Diagram*

## Calculations for each element used

**1. Theoretical Calculations (Belt Conveyor 1):**

A. Utilization (ρ) for $BC_1$:

$$\rho = \frac{Qreq}{Qlim}$$

Required Throughput ($Q_{Req}$) = 51 Panels/hour

$Q_{lim}$ = 0.1/3200 = 112.5 panels/hour

$$\rho = 51/112.5$$

$$\boxed{\rho = 0.4533}$$

B. Mean Queueing Length or Mean waiting area (M (W)):

$$M\ (W) = \frac{\rho^2}{1-\rho}$$

$$\boxed{M\ (W) = 0.37593}$$

**2. Theoretical Calculations (Curved Conveyor 1):**

A. Utilization (ρ) for $CC_1$:

$$\rho = \frac{Qreq}{Qlim}$$

Required Throughput ($Q_{Req}$) = 17 Panels/hour

$Q_{lim}$ = 0.1/3200 = 112.5 panels/hour

$$\rho = \frac{Qreq}{Qlim}$$

$$= 17/112.5$$

$$\boxed{\rho = 0.1511}$$

B. Mean Queueing Length or Mean waiting area (M (W)):

$$M\ (W) = \frac{\rho^2}{1-\rho}$$

$$\boxed{M\ (W) = 0.02689}$$

**3. Theoretical Calculations (Accumulator 1):**

A. Utilization (ρ) for $AC_1$:

$$\rho = \frac{Qreq}{Qlim}$$

Required Throughput ($Q_{Req}$) = 17 Panels/hour

$Q_{lim}$ = 0.1/2000 = 180 panels/hour

$$\rho = \frac{Qreq}{Qlim}$$

$$= 17/180$$

$$\boxed{\rho = 0.0944}$$

B. Mean Queueing Length or Mean waiting area (M (W)):

$$M\ (W) = \frac{\rho^2}{1-\rho}$$

$$\boxed{M\ (W) = 0.0098}$$

**4. Theoretical Calculations (Diverter i.e., Turning Table 2):**

A. Utilization (ρ) for $D_1$:

$$\rho = \frac{Qreq}{Qlim}$$

Working cycle time $T_{WC}$ = ( $\frac{1}{3}$ × Straight transfer time) + ( $\frac{2}{3}$ × cross transfer time)

= 29.33 sec

Required Throughput ($Q_{Req}$) = 51 Panels/hour

Throughput limit ($Q_{lim}$) = $1/T_{WC}$

= 122.72 Panels/hour

$$\rho = \frac{Qreq}{Qlim}$$

$$= 51/122.72$$

$$\boxed{\rho = 0.4155}$$

B. Mean Queueing Length or Mean waiting area (M (W)):

$$M\ (W) = \frac{\rho^2}{1-\rho}$$

$$\boxed{M\ (W) = 0.2955}$$

C. Number of Tasks to allow 85% blockage free operation (K):

At ρ = 0.4155

Probability distribution table:

$$P(n = K) = \rho^K . (1 - \rho)$$

*Table 8 Probability distribution table - Diverters (Layout-2)*

| ρ | K | P(W) | Sum |
|---|---|---|---|
| 0,4155 | 0 | 0,5845 | 0,5845 |
| 0,4155 | 1 | 0,24286 | 0,82736 |
| 0,4155 | 2 | 0,100908 | **0,928268** |

At 85%, Blockage free operation number of tasks that required in the waiting area of the serving system are K = 2 – 1 = 1.

Therefore, K = 1 represents that we have 1 task in the waiting area and 1 task in the server.

So, number of accumulators in the waiting area for $D_1$ = 1.

**5. Theoretical Calculations (Press 1):**

A. Utilization (ρ) for $Press_1$:

$$\rho = \frac{Qreq}{Qlim}$$

Required Throughput ($Q_{Req}$) = 17 Panels/hour

Throughput limit ($Q_{lim}$) = 20 Panels/hour

$$\rho = \frac{Qreq}{Qlim}$$

$$= 17/20$$

$$\boxed{\rho = 0.85}$$

B. Mean Queueing Length or Mean waiting area (M (W)):

$$M(W) = \frac{\rho^2}{1-\rho}$$

$$\boxed{M(W) = 4.8166}$$

**6. Theoretical Calculations (CDP 1):**

A. Utilization (ρ) for $CDP_1$:

$$\rho = \frac{Qreq}{Qlim}$$

Required Throughput ($Q_{Req}$) = 7.65 Panels/hour

Throughput limit ($Q_{lim}$) = 10 Panels/hour

$$\rho = Q_{Req} / Q_{lim}$$

$$= 7.65/10$$

$$\boxed{\rho = 0.765}$$

B. Mean Queueing Length or Mean waiting area (M (W)):

$$M(W) = \frac{\rho^2}{1-\rho}$$

$$\boxed{M(W) = 2.4903}$$

C. Number of Tasks to allow 85% blockage free operation (K):

At $\rho = 0.765$

Probability distribution table:

$$P(n = K) = \rho^K . (1- \rho)$$

*Table 9 Probability distribution table - CDP (Layout-2)*

| ρ | K | P(W) | Sum |
|---|---|---|---|
| 0,765 | 0 | 0,235 | 0,243 |
| 0,765 | 1 | 0,179775 | 0,422775 |
| 0,765 | 2 | 0,137528 | 0,560303 |
| 0,765 | 3 | 0,105209 | 0,665512 |
| 0,765 | 4 | 0,080485 | 0,745996 |
| 0,765 | 5 | 0,061571 | 0,807567 |
| 0,765 | 6 | 0,047102 | **0,854669** |

At 85%, Blockage free operation number of tasks that required in the waiting area of the serving system are K = 6 – 1 = 5.

Therefore, K = 5 represents that we have 5 tasks in the waiting area and 1 task in the server.

So, number of accumulators in the waiting area for $CDP_1$ = 5.

## 7. Theoretical Calculations (Manual 1):

A. Utilization (ρ) for $Manual_1$:

$$\rho = \frac{Qreq}{Qlim}$$

Required Throughput ($Q_{Req}$) = 3.825 Panels/hour

Throughput limit ($Q_{lim}$) = 5 Panels/hour

$$\rho = Q_{Req} / Q_{lim}$$

$$= 3.825/5$$

$$\boxed{\rho = 0.765}$$

B. Mean Queueing Length or Mean waiting area (M (W)):

$$M\ (W) = \frac{\rho\text{^}2}{1-\rho}$$

$$\boxed{M\ (W) = 2.4903}$$

C. Number of Tasks to allow 85% blockage free operation (K):

At ρ = 0.765

Probability distribution table:

$$P\ (n = K) = \rho^K.\ (1- \rho)$$

*Table 10 Probability distribution table - Manual (Layout-2)*

| P | K | P(W) | Sum P(W) |
|---|---|---|---|
| 0,765 | 0 | 0,235 | 0,243 |
| 0,765 | 1 | 0,179775 | 0,422775 |
| 0,765 | 2 | 0,137528 | 0,560303 |
| 0,765 | 3 | 0,105209 | 0,665512 |
| 0,765 | 4 | 0,080485 | 0,745996 |
| 0,765 | 5 | 0,061571 | 0,807567 |
| 0,765 | 6 | 0,047102 | **0,854669** |

At 85%, Blockage free operation number of tasks that required in the waiting area of the serving system are K = 6 – 1 = 5.

Therefore, K = 5 represents that we have 5 tasks in the waiting area and 1 task in the server.

So, number of accumulators in the waiting area for $Manual_1$ = 5.

**8. Availability (V):**

$$\text{Availability } V = \frac{1}{1+K}$$

Where, K = Failure factor

If the elements are in parallel:

$$V = 1 - \prod_{i=1}^{n}\left(1 - \frac{1}{1+Ki}\right)$$

$$\text{Then } K = \frac{1}{V} - 1$$

If the elements are in series: $K = K_1 + K_2 + K_3 + \text{----------} + K_i$

From technical diagram, Overall failure factor K = 0.4157.

$$V = \frac{1}{1+0.4157}$$

$$= 70.63\ \%$$

$$\boxed{V = 70.63\ \%}$$

**9. Power Consumption (P) for BC1:**

Given Parameters for Belt Conveyor:

Mass of the Belt conveyor $m_{Belt} = 4\ Kg/m^2$

$\mu_g = 0{,}3$

Moving masses in return strand of belt conveyor

$M_{IdlerBC} = 5\ Kg$

$L_{IdlerBC} = 3m$

Drive efficiency: $n_{driveBC} = 0.91$

$g = 9.81\ m/s^2$

Panel Parameters:

$m_{Panel} = 120\ Kg$

$l_{Panel} = 2m$

Belt Parameters from Layout:

Length: $L_{Belt} = 5.6\ m$

Width: $B = 2.2\ m$

Speed: $V_{BC} = 0.1\ m/s^2$

Start-up time: $t_{aBC} = 3\ sec$

Meter weights:

$$q_{Panel} = (m_{Panel} \times g) / l_{Panel}$$
$$= (120 \times 9.81) / 2$$
$$= 588.6 \text{ N/m}$$

$$q_{IdlerBC} = (m_{IdlerBC} \times g) / l_{IdlerBC}$$
$$= (5 \times 9.81) / 3$$
$$= 16.35 \text{ N/m}$$

$$q_{Belt} = m_{Belt} \times B \times g$$
$$= 4 \times 2.2 \times 9.81$$
$$= 86.33 \text{ N/m}$$

Power Consumption of Belt Conveyor:

Motion resistances in return strand

$$F_{H1} = q_{Belt} \times L_{Bc} \times \cos(\sigma_{BC}) + q_{Idler} \times L_{Bc} \times 0.02$$
$$= 146.86 \text{ N}$$

$$F_{St1} = - (q_{Belt} \times L_{Bc} \times \sin(\sigma_{BC})) = 0$$

Motion resistances in conveying strand:

$$F_{H2} = (q_{Panel} + q_{Belt}) \times L_{Bc} \times \cos(\sigma_{BC}) \times \mu_g$$
$$= 1133.88 \text{ N}$$

$$F_{St2} = - ((q_{Panel} + q_{Belt}) \times L_{Bc} \times \sin(\sigma_{BC})) = 0$$

$$F_{totalBC} = F_{H1} + F_{st1} + F_{H2} + F_{st2} = 1280.74 \text{ N}$$

$$a_{aBC} = V_{BC} / t_{aBC} = 0.0333 \text{ m/s}^2$$

$$F_{AccBC} = 2 \times L_{BC} \times a_{aBC} \times ((0.9\, q_{IdlerBC} / g) + (q_{Panel} / g) + (q_{Belt} / g))$$
$$= 26.25 \text{ N}$$

$(F_{totalBC} + F_{AccBC}) / F_{totalBC} = 1.0205$ within the range of starting factors from 1.2 to 1.7

Therefore,

$$P_{MBC} = (F_{totalBC} \times V_{BC}) / n_{driveBC}$$
$$= (1280.74 \times 0.1) / 0.91 = 127 \text{ W}$$

$$\boxed{P_{MBC} = 141 \text{ W}}$$

**10. Power Consumption (P) for Accumulator (AC):**

Given Parameters for Belt Conveyor:

Moving masses in Roller conveyor

$m_{idlerRC} = 5$ Kg

$d_{shaftRC} = 10$ mm

$d_{idlerRC} = 90$ mm

$l_{idlerRC} = 150$ mm

Drive efficiency: $n_{driveRC} = 0.91$

$g = 9.81\ m/s^2$

Panel Parameters:

$m_{Panel} = 120$ Kg

$l_{Panel} = 2m$

Roller conveyor parameters:

Length: $L_{RC} = 2$ m

Width: $B = 2.2$ m

Speed: $V_{RC} = 0.1\ m/s^2$

Start-up time: $t_{aRC} = 3$ sec

Meter weights:

$$q_{Panel} = (m_{Panel} \times g) / l_{Panel}$$
$$= (120 \times 9.81) / 2$$
$$= 588.6\ N/m$$

$$q_{IdlerBC} = (m_{IdlerBC} \times g) / l_{IdlerBC}$$
$$= (5 \times 9.81) / 3$$
$$= 16.35\ N/m$$

$$q_{Belt} = m_{Belt} \times B \times g$$
$$= 4 \times 2.2 \times 9.81$$
$$= 86.33\ N/m$$

Power Consumption of Roller Conveyor:

$f_R = 2$ mm for steel/plastic contact

$\mu_b = 0.003$ for Roller bearings

$\mu_r = (2 / d_{idlerRC}) \times (f_R + \mu_b \times d_{shaftRC} \times 0.5)$

$= 0.0448$

$F_{fric} = (q_{panel} \times L_{Rc} \times \mu_r + q_{IdlerRC} \times L_{Rc} \times \mu_r)$

$= 82$ N

$F_{totalRC} = F_{fric} = 81.9971$ N

$a_{aRC} = V_{RC} / t_{aRC} = 0.0333$ m/s$^2$

$F_{AccRC} = L_{RC} \times a_{aRC} \times ((0.9\ q_{IdlerRC} / g) + (q_{Panel} / g))$

$= 6$ N

$(F_{totalRC} + F_{AccRC}) / F_{totalRC} = 1.0732$, within the range of starting factors from 1.2 to 1.7

Therefore,

$P_{MRC} = (F_{totalRC} \times V_{RC}) / n_{total}$

Where $n_{total} = n_{driveRC} \times n_{trans}$^(n-1)

$n_{trans} = 0.88$

$n = L_{RC} / (2.\ L_{idlerRC}) = 6.6667$ every second roller is driven

$n_{total} = 0.441$

$$\boxed{P_{MRC} = 19 \text{ W}}$$

## Overall results (Layout2):

*Table 11 Utilisation and Waiting area table (Layout-2)*

| Sr. No. | Elements | Q(lim.) pallets/hour | Q(Req.) pallets/hour | ρ | M(w) |
|---|---|---|---|---|---|
| 1 | BC1 | 112.5 | 51 | 0.453333333 | 0.375934959 |
| 2 | BC2 | 112.5 | 12.75 | 0.113333333 | 0.014486216 |
| 3 | BC3 | 112.5 | 38.25 | 0.34 | 0.175151515 |
| 4 | BC4 | 112.5 | 7.65 | 0.068 | 0.004961373 |
| 5 | BC5 | 112.5 | 15.3 | 0.136 | 0.021407407 |
| 6 | BC6 | 112.5 | 22.95 | 0.204 | 0.052281407 |
| 7 | BC7 | 112.5 | 30.6 | 0.272 | 0.101626374 |
| 8 | BC8 | 112.5 | 38.25 | 0.34 | 0.175151515 |
| 9 | BC9 | 112.5 | 30.6 | 0.272 | 0.101626374 |
| 10 | BC10 | 112.5 | 22.95 | 0.204 | 0.052281407 |
| 11 | BC11 | 112.5 | 15.3 | 0.136 | 0.021407407 |
| 12 | BC12 | 112.5 | 7.65 | 0.068 | 0.004961373 |
| 13 | BC13 | 112.5 | 12.75 | 0.113333333 | 0.014486216 |
| 14 | BC14 | 112.5 | 7.65 | 0.068 | 0.004961373 |
| 15 | BC15 | 112.5 | 3.825 | 0.034 | 0.001196687 |
| 16 | BC16 | 112.5 | 38.25 | 0.34 | 0.175151515 |
| 17 | BC17 | 112.5 | 42.075 | 0.374 | 0.223444089 |
| 18 | BC18 | 112.5 | 12.75 | 0.113333333 | 0.014486216 |
| 19 | BC19 | 112.5 | 38.25 | 0.34 | 0.175151515 |
| 20 | CC1 | 112.5 | 17 | 0.151111111 | 0.02689936 |
| 21 | CC2 | 112.5 | 17 | 0.151111111 | 0.02689936 |
| 22 | CC3 | 112.5 | 38.25 | 0.34 | 0.175151515 |
| 23 | CC4 | 112.5 | 12.75 | 0.113333333 | 0.014486216 |
| 24 | AC1 | 180 | 17 | 0.094444444 | 0.009850034 |
| 25 | AC2 | 180 | 17 | 0.094444444 | 0.009850034 |
| 26 | AC3 | 180 | 17 | 0.094444444 | 0.009850034 |
| 27 | AC4 | 180 | 17 | 0.094444444 | 0.009850034 |
| 28 | AC5 | 180 | 17 | 0.094444444 | 0.009850034 |
| 29 | AC6 | 180 | 51 | 0.283333333 | 0.112015504 |
| 30 | AC7 | 180 | 7.65 | 0.0425 | 0.001886423 |
| 31 | AC8 | 180 | 7.65 | 0.0425 | 0.001886423 |
| 32 | AC9 | 180 | 7.65 | 0.0425 | 0.001886423 |
| 33 | AC10 | 180 | 7.65 | 0.0425 | 0.001886423 |
| 34 | AC11 | 180 | 7.65 | 0.0425 | 0.001886423 |
| 35 | AC12 | 180 | 7.65 | 0.0425 | 0.001886423 |
| 36 | AC13 | 180 | 7.65 | 0.0425 | 0.001886423 |
| 37 | AC14 | 180 | 7.65 | 0.0425 | 0.001886423 |
| 38 | AC15 | 180 | 7.65 | 0.0425 | 0.001886423 |
| 39 | AC16 | 180 | 7.65 | 0.0425 | 0.001886423 |
| 40 | AC17 | 180 | 7.65 | 0.0425 | 0.001886423 |
| 41 | AC18 | 180 | 7.65 | 0.0425 | 0.001886423 |

| | | | | | |
|---|---|---|---|---|---|
| 42 | AC19 | 180 | 7.65 | 0.0425 | 0.001886423 |
| 43 | AC20 | 180 | 7.65 | 0.0425 | 0.001886423 |
| 44 | AC21 | 180 | 7.65 | 0.0425 | 0.001886423 |
| 45 | AC22 | 180 | 7.65 | 0.0425 | 0.001886423 |
| 46 | AC23 | 180 | 7.65 | 0.0425 | 0.001886423 |
| 47 | AC24 | 180 | 7.65 | 0.0425 | 0.001886423 |
| 48 | AC25 | 180 | 7.65 | 0.0425 | 0.001886423 |
| 49 | AC26 | 180 | 7.65 | 0.0425 | 0.001886423 |
| 50 | AC27 | 180 | 7.65 | 0.0425 | 0.001886423 |
| 51 | AC28 | 180 | 7.65 | 0.0425 | 0.001886423 |
| 52 | AC29 | 180 | 7.65 | 0.0425 | 0.001886423 |
| 53 | AC30 | 180 | 7.65 | 0.0425 | 0.001886423 |
| 54 | AC31 | 180 | 7.65 | 0.0425 | 0.001886423 |
| 55 | AC32 | 180 | 7.65 | 0.0425 | 0.001886423 |
| 56 | AC33 | 180 | 7.65 | 0.0425 | 0.001886423 |
| 57 | AC34 | 180 | 7.65 | 0.0425 | 0.001886423 |
| 58 | AC35 | 180 | 7.65 | 0.0425 | 0.001886423 |
| 59 | AC36 | 180 | 7.65 | 0.0425 | 0.001886423 |
| 60 | AC37 | 180 | 3.825 | 0.02125 | 0.000461367 |
| 61 | AC38 | 180 | 3.825 | 0.02125 | 0.000461367 |
| 62 | AC39 | 180 | 3.825 | 0.02125 | 0.000461367 |
| 63 | AC40 | 180 | 3.825 | 0.02125 | 0.000461367 |
| 64 | AC41 | 180 | 3.825 | 0.02125 | 0.000461367 |
| 65 | AC42 | 180 | 3.825 | 0.02125 | 0.000461367 |
| 66 | AC43 | 180 | 3.825 | 0.02125 | 0.000461367 |
| 67 | AC44 | 180 | 3.825 | 0.02125 | 0.000461367 |
| 68 | AC45 | 180 | 3.825 | 0.02125 | 0.000461367 |
| 69 | AC46 | 180 | 3.825 | 0.02125 | 0.000461367 |
| 70 | AC47 | 180 | 12.75 | 0.070833333 | 0.005399851 |
| 71 | D1 | 122.72 | 51 | 0.415580183 | 0.295518535 |
| 72 | D2 | 130.9 | 51 | 0.38961039 | 0.248687483 |
| 73 | D3 | 109.09 | 7.65 | 0.070125584 | 0.005288453 |
| 74 | D4 | 130.9 | 15.3 | 0.116883117 | 0.015469824 |
| 75 | D5 | 130.9 | 22.95 | 0.175324675 | 0.03727375 |
| 76 | D6 | 130.9 | 30.6 | 0.233766234 | 0.071318512 |
| 77 | D7 | 130.9 | 38.25 | 0.292207792 | 0.120636244 |
| 78 | D8 | 130.9 | 38.25 | 0.292207792 | 0.120636244 |
| 79 | D9 | 130.9 | 30.6 | 0.233766234 | 0.071318512 |
| 80 | D10 | 130.9 | 22.95 | 0.175324675 | 0.03727375 |
| 81 | D11 | 130.9 | 15.3 | 0.116883117 | 0.015469824 |
| 82 | D12 | 130.9 | 7.65 | 0.058441558 | 0.003627407 |
| 83 | D13 | 130.9 | 38.25 | 0.292207792 | 0.120636244 |
| 84 | D14 | 130.9 | 7.65 | 0.058441558 | 0.003627407 |
| 85 | D15 | 109.09 | 3.825 | 0.035062792 | 0.001274072 |
| 86 | D16 | 130.09 | 38.25 | 0.294027212 | 0.12245798 |
| 87 | D17 | 130.09 | 42.075 | 0.323429933 | 0.154613582 |

| | | | | | |
|---|---|---|---|---|---|
| 88 | D18 | 122.72 | 51 | 0.415580183 | 0.295518535 |
| 89 | Press 1 | 20 | 17 | 0.85 | 4.816666667 |
| 90 | Press 2 | 20 | 17 | 0.85 | 4.816666667 |
| 91 | Press 3 | 20 | 17 | 0.85 | 4.816666667 |
| 92 | CDP 1 | 10 | 7.65 | 0.765 | 2.490319149 |
| 93 | CDP 2 | 10 | 7.65 | 0.765 | 2.490319149 |
| 94 | CDP 3 | 10 | 7.65 | 0.765 | 2.490319149 |
| 95 | CDP 4 | 10 | 7.65 | 0.765 | 2.490319149 |
| 96 | CDP 5 | 10 | 7.65 | 0.765 | 2.490319149 |
| 97 | M1 | 5 | 3.825 | 0.765 | 2.490319149 |
| 98 | M2 | 5 | 3.825 | 0.765 | 2.490319149 |

*Table 12 Power Consumption (Layout-2)*

| Sr.no | Elements | Power Consumption (W) |
|---|---|---|
| 1 | BC1 | 141 |
| 2 | BC2 | 2300 |
| 3 | BC3 | 151 |
| 4 | BC4 | 261 |
| 5 | BC5 | 261 |
| 6 | BC6 | 261 |
| 7 | BC7 | 261 |
| 8 | BC8 | 261 |
| 9 | BC9 | 261 |
| 10 | BC10 | 261 |
| 11 | BC11 | 261 |
| 12 | BC12 | 261 |
| 13 | BC13 | 261 |
| 14 | BC14 | 261 |
| 15 | BC15 | 261 |
| 16 | BC16 | 261 |
| 17 | BC17 | 261 |
| 18 | BC18 | 110 |
| 19 | BC19 | 560 |
| 20 | CC1 | 212 |
| 21 | CC2 | 212 |
| 22 | CC3 | 212 |
| 23 | CC4 | 212 |
| 24 | AC | 19 |

*Table 13 Waiting area (Layout-2)*

| Sr.no | Elements | K (Waiting area) |
|---|---|---|
| 1 | D1 | 1 |
| 2 | D2 | 1 |
| 3 | D3 | 0 |
| 4 | D4 | 0 |

| | | |
|---|---|---|
| 5 | D5 | 0 |
| 6 | D6 | 0 |
| 7 | D7 | 0 |
| 8 | D8 | 0 |
| 9 | D9 | 0 |
| 10 | D10 | 0 |
| 11 | D11 | 0 |
| 12 | D12 | 0 |
| 13 | D13 | 0 |
| 14 | D14 | 0 |
| 15 | D15 | 0 |
| 16 | D16 | 0 |
| 17 | D17 | 0 |
| 18 | D18 | 1 |
| 19 | CDP 1 | 5 |
| 20 | CDP 2 | 5 |
| 21 | CDP 3 | 5 |
| 22 | CDP 4 | 5 |
| 23 | CDP 5 | 5 |
| 24 | M1 | 5 |
| 25 | M2 | 5 |

Total Power consumption = 8657 W.

## Comparison between Layouts

Both layouts must fulfil the same purpose of providing a convenient Material Handling System for panels originating from source to sink, yet both layouts have different approaches to the task.

To start with the number of workstations, both layouts have 3 press, 5 CDP workstations, and 2 manual workstations. Both the systems use belt conveyors, accumulators, diverters, curved conveyors, and sensors to convey panels.

Layout 2 has more diverter utilization compared to 1st layout. This makes layout 2 less preferable because, in the case of a high number of panels passing over each diverter, there is a chance that diverters in layout 2 may not be able to work efficiently. Optimum utilization of the diverters is always preferred.

The total availability of layout 2 is higher than layout 1 by around 2%. So, it can be said that the material handling components of layout 2 are more reliable in achieving the required throughput.

Because of a greater number of material handling components that are used in layout 2, it has more power consumption compared to layout 1. When power consumption is considered an important factor, then layout 2 is less preferred because of the high electricity required to run all the components.

As both layouts have the same number of CDP workstations and manual workstations, the waiting areas are the same. As the number of serving systems and accumulators are more in layout 1 compared to layout 2, there can be more waiting for panels in these serving systems in layout 1.

For layout 2, we can clearly see there is an extra belt conveyor provided (BC13). In case of bottlenecks, this belt can be used to transfer goods to warehouse. There is no such provision in layout 1 and therefore layout 2 is more suitable for avoiding bottlenecks.

Layout 1 has overall less area utilization and has a central belt conveyor for material transfer to the warehouse. This makes layout 1 preferable where the shortest path and centralized flow are expected.

TO conclude, layout 1 is preferable over layout 2, as it has comparatively more advantages.

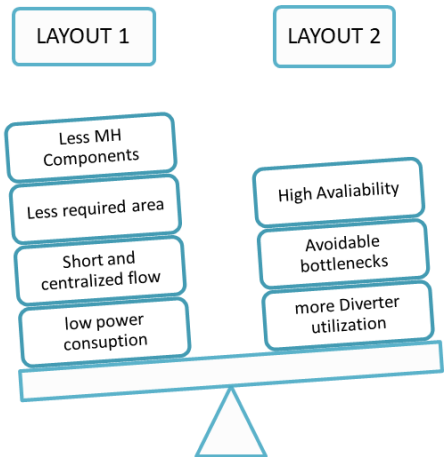


*Figure 19 Comparison between Layouts*

# Bibliography


[1] Jonge Poerink COnveyors, “puma-curve,” [Online]. Available: https://www.jpconveyors.com/conveyors/puma-curve/. [Accessed January 2022].

[2] Best process solutions inc., “belt-conveyors,” 2019. [Online]. Available: https://www.bpsvibes.com/wp-content/uploads/2017/04/Belt-Conveyor-3.png. [Accessed January 2022].

[3] Intelligrated, June 2015. [Online]. Available: https://www.mmh.com/wp_content/intelligrated_wp_accumulation_conveyor_110415.pdf. [Accessed November 2021].

[4] KEYMAS CONVEYOR SYSTEMS AND WAREHOUSE AUTOMATION, “zero-line-pressure,” CJB Interactive, [Online]. Available: https://www.keymas.co.uk/zero-line-pressure/. [Accessed January 2022].

[5] Intersystem, “vridbord-irvdikvd-80,” May 2017. [Online]. Available: https://www.intersystem.se/produkter/vridbord-irvdikvd-80/. [Accessed January 2022].

[6] accenture, “what-artificial-intelligence-really,” 2019. [Online]. Available: https://www.accenture.com/us-en/services/digital/what-artificial-intelligence-really. [Accessed December 2021].

[7] S. Sabu, “computer-vision-in-logistics,” 23 July 2021. [Online]. Available: https://www.insightsforprofessionals.com/management/fleet/computer-vision-in-logistics. [Accessed January 2022].

[8] K. Bokhan, “Computer vision in manufacturing: What, Why, and How?,” 14 August 2020. [Online]. Available: https://www.n-ix.com/computer-vision-manufacturing/. [Accessed December 2021].

[9] S. &. D. J. &. H. J. &. B. W. &. D. S. &. S. M. &. D. J. ruyne, “Detection and Characterization of a Biochemical Signature Associated with Diabetic Nephropathy Using Near-infrared Spectroscopy on Tissue Sections,” Journal of Clinical Medicine, vol. 8, 2019.

[10] CONVEYCO, “order-selection-systems/print-and-apply,” [Online]. Available: https://www.conveyco.com/technology/order-selection-systems/print-and-apply/. [Accessed December 2021].

[11] pepperl-fuchs, “Automatic Coordination in Warehouses,” [Online]. Available: https://www.pepperl-fuchs.com/global/en/25858.htm. [Accessed January 2022].

[12] Brother, 2021. [Online]. Available: https://www.brother.eu/-/media/images/brother-de/blog/header-images/branchentrends/2021/branchentrends-logistik-rfid-header.jpg?rev=6d38352bb44d470bad6c70e63ec586ec&hash=C7737E3F5E44261EEB1B1C932CBB4F5E490CE229. [Accessed January 2022].

[13] scaletronicglobal, “automatic-barcode-scanning-stations,” 2021. [Online]. Available: https://scaletronicglobal.com/product/automatic-barcode-scanning-stations/. [Accessed Decembwer 2021].

[14] SICK Sensor Intelligence, “Monitoring belt tension on the conveyor belt,” [Online]. Available: https://www.sick.com/de/en/industries/building-materials/cement/material-handling/conveyor-belts-in-the-cement-industry/monitoring-belt-tension-on-the-conveyor-belt/c/p510968. [Accessed December 2021].

[15] OMRON Industrial Automation, “Photoelectric Sensors,” 2007 - 2022. [Online]. Available: https://www.ia.omron.com/support/guide/43/introduction.html. [Accessed December 2021].

[16] SICK Sensor Intelligence, “Lichttaster und Lichtschranken,” [Online]. Available: https://www.sick.com/de/de/lichttaster-und-lichtschranken/lichttaster-und-lichtschranken/multipac/c/g246054. [Accessed January 2022].

[17] D & F Liquidators, “Applications of Limit Switches in Conveyor Belts,” 2021. [Online]. Available: https://www.dfliq.net/blog/applications-of-limit-switches-in-conveyor-belts/. [Accessed January 2022].

[18] distrelec, “Honeywell-GLCB01A9A-30138735,” [Online]. Available: https://www.distrelec.de/Web/WebShopImages/landscape_large/5-/01/Honeywell-GLCB01A9A-30138735-01.jpg. [Accessed January 2022].

# Appendix: Data from EDEC – Group E

## Appendix A: MDRE Tool Data

### Appendix A.1: Identification View [1]

| | | | | | | | |
|---|---|---|---|---|---|---|---|
| Model Metadata: | | | | | | | |
| ModelName | ModelUUID | Created | LastModifiec | LinkedTo | | | |
| IdentificationView | 61f3ccc25d15c2089609963a | 2022-01-28T11:00:18.463Z | 2022-01-28T11:48:33.370Z | | | | |
| | | | | | | | |
| | | | | | | | |
| Node Data: | | | | | | | |
| | | | | | | | |
| NodeType | UUID | Name | Description | parentId | ProcessID | ProcessDescription | |
| Filling | 947af4db-3a26-4071-ba12-46c24c933e9c | Filling | | null | F001 | Filling001 | |
| | | | | | | | |
| NodeType | UUID | Name | Description | parentId | ProcessID | ProcessDescription | |
| Vibrating | fea237e2-1d4c-4677-a567-b616917953d9 | Vibrating | | null | V002 | Vibrating002 | |
| | | | | | | | |
| NodeType | UUID | Name | Description | parentId | ResourceID | ManufacturerName | SerialNumber |
| FillerMachine | 05ee6b0d-eced-4cb3-9827-bd08d0afac89 | FillerMachine | | null | FM001 | ABD | TEFM001 |
| | | | | | | | |
| NodeType | UUID | Name | Description | parentId | ResourceID | ManufacturerName | SerialNumber |
| VibratingTable | dc26614f-7903-477b-b542-97ba894cd0f6 | VibratingTable | | null | VT002 | BBD | TEVT002 |
| | | | | | | | |
| NodeType | UUID | Name | Description | parentId | SensorID | ManufacturerName | SerialNumber |
| WeightSensor | 85a33d79-e257-4512-898f-10930e014386 | WeightSensor | | null | WS001 | ABD | TEWS001 |
| | | | | | | | |
| NodeType | UUID | Name | Description | parentId | ControllerID | ManufacturerName | SerialNumber |
| FillingController | abccffe4-864e-4106-b942-5a19887b1f97 | FillingController | | null | FC001 | ABD | TEFC001 |
| | | | | | | | |
| NodeType | UUID | Name | Description | parentId | ControllerID | ManufacturerName | SerialNumber |
| VibratingController | 60288094-3748-46a5-a8a5-4765ff9b4a60 | VibratingController | | null | VC002 | BBD | TEVC002 |
| | | | | | | | |
| NodeType | UUID | Name | Description | parentId | PartNumber | PartName | PartDescription |
| PlasticGranules | b789f85f-d87a-4760-8eea-feb892f2783a | PlasticGranules | | null | PG003 | PG | Raw Material |
| | | | | | | | |
| NodeType | UUID | Name | Description | parentId | ProcessID | ProcessDescription | |
| Covering | 0e3b4893-889a-44e4-ab17-db420114329a | Covering | | null | C003 | Covering003 | |
| | | | | | | | |
| NodeType | UUID | Name | Description | parentId | ResourceID | ManufacturerName | SerialNumber |
| RoboticArm | 298f0989-3314-4205-84ab-4a872a0d639b | RoboticArm | | null | RA003 | CBD | TERA003 |
| | | | | | | | |
| NodeType | UUID | Name | Description | parentId | ControllerID | ManufacturerName | SerialNumber |
| CoveringController | caf0bfce-5da0-45f2-a4e2-0d642e4d04a3 | CoveringController | | null | CC003 | CBD | TECC003 |
| | | | | | | | |
| NodeType | UUID | Name | Description | parentId | ProcessID | ProcessDescription | |
| HotPressing | 47cc8e23-ac1a-49d4-b3b4-d57dfc051e26 | HotPressing | | null | HP004 | HotPressing004 | |
| | | | | | | | |
| NodeType | UUID | Name | Description | parentId | ProcessID | ProcessDescription | |
| RemovalOfExtraPart | 6952a413-fc3b-4c33-9c3a-9fcefff6e9df | RemovalOfExtraPart | | null | REP004 | RemovalOfExtraPart004 | |
| | | | | | | | |
| NodeType | UUID | Name | Description | parentId | ResourceID | ManufacturerName | SerialNumber |
| HotPressingSystem | b36c4ba5-1f45-4a39-9870-1cdab3f72d47 | HotPressingSystem | | null | HPS004 | DBD | TEHPS004 |
| | | | | | | | |
| NodeType | UUID | Name | Description | parentId | SensorID | ManufacturerName | SerialNumber |
| HeatingTemperatureSensor | 35b6cc8e-5232-45ba-9ea8-8fb9d1f9a088 | HeatingTemperatureSensor | | null | HTS004 | DBD | TEHTS004 |
| | | | | | | | |
| NodeType | UUID | Name | Description | parentId | SensorID | ManufacturerName | SerialNumber |
| HeatingPressureSensor | 8d4b273e-88c2-4c11-9abd-a44033cf4743 | HeatingPressureSensor | | null | HPS004 | DBD | TEHPS004 |
| | | | | | | | |
| NodeType | UUID | Name | Description | parentId | ResourceID | ManufacturerName | SerialNumber |
| RemovingExtraPartSystem | 36394a3f-3f1c-4cde-9053-84a80ac945de | RemovingExtraPartSystem | | null | REPS004 | DBD | TEREPS004 |
| | | | | | | | |
| NodeType | UUID | Name | Description | parentId | ControllerID | ManufacturerName | SerialNumber |
| HotPressingAndRemovingExtraPartController | 9cb1f9df-d938-4c70-93ee-670fafbfee38 | HotPressingAndRemovingExtraPartController | | null | HPREPS004 | DBD | TEHPREP004 |
| | | | | | | | |
| NodeType | UUID | Name | Description | parentId | PartNumber | PartName | PartDescription |
| HotPlate | 033e6512-da01-4fa3-9a98-6f166f7f01aa | HotPlate | | null | HP005 | HP | HotPlate005 |
| | | | | | | | |
| NodeType | UUID | Name | Description | parentId | ProcessID | ProcessDescription | |
| ColdPressing | 931b3e5e-5331-493d-95af-c82f9a7b725d | ColdPressing | | null | CP005 | ColdPressing005 | |
| | | | | | | | |
| NodeType | UUID | Name | Description | parentId | ResourceID | ManufacturerName | SerialNumber |
| ColdPressingSystem | c55c3132-792a-45a4-a9f1-84b4ccb4b916 | ColdPressingSystem | | null | CPS005 | EBD | CPS005 |
| | | | | | | | |
| NodeType | UUID | Name | Description | parentId | SensorID | ManufacturerName | SerialNumber |
| CoolingTemperatureSensor | b22d31ac-0add-4df3-a356-a421487a5db3 | CoolingTemperatureSensor | | null | CTS005 | EBD | TECTS005 |
| | | | | | | | |
| NodeType | UUID | Name | Description | parentId | SensorID | ManufacturerName | SerialNumber |
| CoolingPressureSensor | 1658abb0-40b5-40e4-975d-a1a942773902 | CoolingPressureSensor | | null | CPS005 | EBD | TECPS005 |
| | | | | | | | |
| NodeType | UUID | Name | Description | parentId | ControllerID | ManufacturerName | SerialNumber |
| ColdPressingController | be9afb83-c06e-4e38-a5f4-1c2da9543899 | ColdPressingController | | null | CPC005 | EBD | TECPC005 |
| | | | | | | | |
| NodeType | UUID | Name | Description | parentId | PartNumber | PartName | PartDescription |
| ColdPlate | f0cf21fa-8010-40f7-89e8-149c686d6fc8 | ColdPlate | | null | CP006 | CP | Raw Material |
| | | | | | | | |
| NodeType | UUID | Name | Description | parentId | ProcessID | ProcessDescription | |
| RemovalCoverBaseAndSideWalls | 238e9b02-8604-42af-b628-4c54e1c98971 | RemovalCoverBaseAndSideWalls | | null | RCBSW006 | RemovalCoverBaseAndSideWalls006 | |
| | | | | | | | |
| NodeType | UUID | Name | Description | parentId | ResourceID | ManufacturerName | SerialNumber |
| RemovalCoverBaseAndSideWallsSystem | 44d3a9ac-c482-4001-8851-d86b7da48af3 | RemovalCoverBaseAndSideWallsSystem | | null | RCBSW006 | FFD | TERCBSW006 |
| | | | | | | | |
| NodeType | UUID | Name | Description | parentId | ControllerID | ManufacturerName | SerialNumber |
| RemovalCoverBaseAndSideWallsController | 1914609d-0d22-406b-bb44-45973238d78b | RemovalCoverBaseAndSideWallsController | | null | RCBSW006 | FFD | TERCBSW006 |
| | | | | | | | |
| NodeType | UUID | Name | Description | parentId | PartNumber | PartName | PartDescription |
| RawPlate | 2dba7ed9-b29a-48ee-9f97-bcf40f7b61ea | RawPlate | | null | RP007 | RP | Raw Material |
| | | | | | | | |
| NodeType | UUID | Name | Description | parentId | ProcessID | ProcessDescription | |
| OpticalScanningAndIdentification | 140d28eb-74e3-4802-b502-80fe7067fd4a | OpticalScanningAndIdentification | | null | OSI007 | OpticalScanningAndIdentification007 | |
| | | | | | | | |
| NodeType | UUID | Name | Description | parentId | ResourceID | ManufacturerName | SerialNumber |
| OpticalScanningAndIdentificationSystem | 7d4e73ca-f9e6-4f71-bbe6-14fc27c84de0 | OpticalScanningAndIdentificationSystem | | null | OSIS007 | GBD | TEOSIS007 |

| | | | | | | | |
|---|---|---|---|---|---|---|---|
| NodeType | UUID | Name | Description | parentId | ControllerID | ManufacturerName | SerialNumber |
| OpticalScanningAndIdentificationController | 68f533df-17e4-4460-8df0-56addf3877d7 | OpticalScanningAndIdentificationController | | null | OSIC007 | GBD | TEOSIC007 |
| | | | | | | | |
| NodeType | UUID | Name | Description | parentId | PartNumber | PartName | PartDescription |
| ScannedPlate | 4570b0fe-4b11-4179-86fb-a88890c13e01 | ScannedPlate | | null | SP008 | SP | Raw Material |
| | | | | | | | |
| NodeType | UUID | Name | Description | parentId | ProcessID | ProcessDescription | |
| CustomiseCdp | 2b5826d2-e2fb-42bd-a30a-b803c85c809b | CustomiseCdp | | null | CC008 | CustomiseCdp008 | |
| | | | | | | | |
| NodeType | UUID | Name | Description | parentId | ResourceID | ManufacturerName | SerialNumber |
| CustomiseCdpSystem | 0b065b54-3025-46df-b458-a43554fac6e4 | CustomiseCdpSystem | | null | CCS008 | HBD | TECCS008 |
| | | | | | | | |
| NodeType | UUID | Name | Description | parentId | ControllerID | ManufacturerName | SerialNumber |
| CustomiseCdpController | 5a977f25-9aa9-4160-bd3d-38272db454e9 | CustomiseCdpController | | null | CCC008 | HBD | TECC008 |
| | | | | | | | |
| NodeType | UUID | Name | Description | parentId | PartNumber | PartName | PartDescription |
| PpAndHdpe | 6095dd92-e9d3-437e-bb90-dd1f7e815b15 | PpAndHdpe | | null | PAH001 | PAH | Raw Material |
| | | | | | | | |
| NodeType | UUID | Name | Description | parentId | PartNumber | PartName | PartDescription |
| GranulesInDye | 3de52a5e-7728-4126-a86b-db3dd9b638f2 | GranulesInDye | | null | GID002 | GID | Raw Material |
| | | | | | | | |
| NodeType | UUID | Name | Description | parentId | PartNumber | PartName | PartDescription |
| CoveredPlate | 8e378e21-65a9-479c-8af5-eaae48377f82 | CoveredPlate | | null | CP004 | CP | CoveredPlate004 |
| | | | | | | | |
| NodeType | UUID | Name | Description | parentId | ConveyorID | ManufacturerName | |
| BeltConveyor | db53e289-6c39-481f-84fb-796bab18caf3 | BeltConveyor | | null | BB | LBD | |
| | | | | | | | |
| NodeType | UUID | Name | Description | parentId | AccumulatorI[ | ManufacturerName | |
| Accumulator | fee38c0b-0b52-4d3e-be62-402615d0e2a8 | Accumulator | | null | ACC | LBD | |
| | | | | | | | |
| NodeType | UUID | Name | Description | parentId | TurnTableID | ManufacturerName | |
| TurnTable | 7a234dec-32ad-4e77-b78a-c0276fb52af3 | TurnTable | | null | TT | LBD | |
| | | | | | | | |
| NodeType | UUID | Name | Description | parentId | ConveyorID | ManufacturerName | |
| CurvedConveyor | 4c1c4ffd-e989-4ac8-a617-ee58f085675f | CurvedConveyor | | null | CC | LBD | |
| | | | | | | | |
| | | | | | | | |
| Edge Data: | | | | | | | |

*Figure 20 Identification View*

# Appendix A.2: Properties [2]

## Appendix A.2.1: Attributes

| View Concept | Identification | Product Design | Function Design | Mechanical Engineering | Electrical Engineering | Automation Engineering | Logistics Design |
|---|---|---|---|---|---|---|---|
| PpAndHdpe | PartNumber<br>PartName<br>PartDescrription | Material<br>Size | | | | | |
| Filling | ProcessID<br>ProcessDescription | EstimatedTime<br>FlowRate | CycleTime<br>EstimatedTime | ProcessForce | InputVoltage<br>InputCurrent | | |
| AutonomousMobileRobot1A | RobotIdentification<br>RobotDescription | | CycleTime<br>CalculatedProcessTime | OverallDimensions | PowerConsumption | SelfOptimization<br>AutomaticConfiguration | |
| GranulesInDye | PartNumber<br>PartName<br>PartDescrription | Material<br>Size | | | | | |
| Vibrating | ProcessID<br>ProcessDescription | EstimatedTime<br>VibratingIntensity | CycleTime<br>EstimatedTime | Vibration | InputVoltage<br>InputCurrent | | |
| FillerMachine | ResouceID<br>ManufcturerName<br>SerialNumber | | CycleTime<br>SetUpTime<br>MaintenaceCost | Material<br>OverallDimensions | PowerConsumption | FillingLevel | |
| VibratingTable | ResouceID<br>ManufcturerName<br>SerialNumber | | CycleTime<br>SetUpTime<br>MaintenaceCost | Material<br>OverallDimensions | PowerConsumption | VibrationLevel | |
| WeightSensor | ResouceID<br>ManufcturerName<br>SerialNumber | | CycleTime<br>SetUpTime<br>MaintenaceCost | | PowerConsumption | Feedback | |
| FillingController | ResouceID<br>ManufcturerName<br>SerialNumber | | CycleTime<br>SetUpTime<br>MaintenaceCost | OverallDimensions | PowerConsumption | SelfOptimization<br>AutomaticConfiguration | |
| VibratingController | ResouceID<br>ManufcturerName<br>SerialNumber | | CycleTime<br>SetUpTime<br>MaintenaceCost | OverallDimensions | PowerConsumption | SelfOptimization<br>AutomaticConfiguration | |
| PlasticGranules | PartNumber<br>PartName<br>PartDescrription | Material<br>Size | | | | | |
| AutonomousMobileRobot1AA | RobotIdentification<br>RobotDescription | | CycleTime<br>CalculatedProcessTime | OverallDimensions | PowerConsumption | SelfOptimization<br>AutomaticConfiguration | |
| Covering | ProcessID<br>ProcessDescription | EstimatedTime | CycleTime<br>EstimatedTime | DimentionalAccuracy | InputVoltage<br>InputCurrent | | |
| RoboticArm | ResouceID<br>ManufcturerName<br>SerialNumber | | CycleTime<br>SetUpTime<br>MaintenaceCost | Material<br>OverallDimensions | PowerConsumption | SelfOptimization<br>Feedback | |
| CoveringController | ResouceID<br>ManufcturerName<br>SerialNumber | | CycleTime<br>SetUpTime<br>MaintenaceCost | OverallDimensions | PowerConsumption | SelfOptimization<br>AutomaticConfiguration | |
| CoveredPlate | PartNumber<br>PartName<br>PartDescrription | Material<br>Size | | | | | |
| AutonomousMobileRobot1A | RobotIdentification<br>RobotDescription | | CycleTime<br>CalculatedProcessTime | OverallDimensions | PowerConsumption | SelfOptimization<br>AutomaticConfiguration | |
| HotPressing | ProcessID<br>ProcessDescription | EstimatedTime | CycleTime<br>PressingTime<br>HeatingTime | ProcessForce | InputVoltage<br>InputCurrent | | |
| RemovalOfExtraPart | ProcessID<br>ProcessDescription | EstimatedTime | CycleTime<br>EstimatedTime | DimentionalAccuracy | InputVoltage<br>InputCurrent | | |
| HotPressingSystem | ResouceID<br>ManufcturerName<br>SerialNumber | | CycleTime<br>SetUpTime<br>MaintenaceCost | Material<br>OverallDimensions | PowerConsumption | MaxHeatingLevel | |
| HeatingTemperatureSensor | ResouceID<br>ManufcturerName<br>SerialNumber | | CycleTime<br>SetUpTime<br>MaintenaceCost | | PowerConsumption | Feedback | |
| HeatingPressureSensor | ResouceID<br>ManufcturerName<br>SerialNumber | | CycleTime<br>SetUpTime<br>MaintenaceCost | | PowerConsumption | Feedback | |
| RemovingExtraPartSystem | ResouceID<br>ManufcturerName<br>SerialNumber | | CycleTime<br>SetUpTime<br>MaintenaceCost | Material<br>OverallDimensions | PowerConsumption | MaxForce<br>MinForce | |

| | | | | | | | |
|---|---|---|---|---|---|---|---|
| HotPressingAndRemovingExtraPartController | ResouceID<br>ManufcturerName<br>SerialNumber | | CycleTime<br>SetUpTime<br>MaintenaceCost | OverallDimensions | PowerConsumption | SelfOptimization<br>AutomaticConfiguration | |
| HotPlate | PartNumber<br>PartName<br>PartDescrription | Material<br>Size | | | | | |
| AutonomousMobileRobot1AAA | RobotIdentification<br>RobotDescription | | CycleTime<br>CalculatedProcessTime | OverallDimensions | PowerConsumption | SelfOptimization<br>AutomaticConfiguration | |
| ColdPressing | ProcessID<br>ProcessDescription | EstimatedTime | CycleTime<br>PressingTime<br>CoolingTime | ProcessForce | InputVoltage<br>InputCurrent | | |
| ColdPressingSystem | ResouceID<br>ManufcturerName<br>SerialNumber | | CycleTime<br>SetUpTime<br>MaintenaceCost | Material<br>OverallDimensions | PowerConsumption | MaxCoolingLevel | |
| CoolingTemperatureSensor | ResouceID<br>ManufcturerName<br>SerialNumber | | CycleTime<br>SetUpTime<br>MaintenaceCost | | PowerConsumption | Feedback | |
| CoolingPressureSensor | ResouceID<br>ManufcturerName<br>SerialNumber | | CycleTime<br>SetUpTime<br>MaintenaceCost | | PowerConsumption | Feedback | |
| ColdPressingController | ResouceID<br>ManufcturerName<br>SerialNumber | | CycleTime<br>SetUpTime<br>MaintenaceCost | OverallDimensions | PowerConsumption | SelfOptimization<br>AutomaticConfiguration | |
| ColdPlate | PartNumber<br>PartName<br>PartDescrription | Material<br>Size | | | | | |
| AutonomousMobileRobot1AAAA | RobotIdentification<br>RobotDescription | | CycleTime<br>CalculatedProcessTime | OverallDimensions | PowerConsumption | SelfOptimization<br>AutomaticConfiguration | |
| RemovalCoverBaseAndSideWalls | ProcessID<br>ProcessDescription | EstimatedTime | CycleTime<br>PressingTime<br>RemovingTime | DimentionalAccuracy | InputVoltage<br>InputCurrent | MaxForce<br>MinForce | |
| RemovalCoverBaseAndSideWallsSystem | ResouceID<br>ManufcturerName<br>SerialNumber | | CycleTime<br>SetUpTime<br>MaintenaceCost | Material<br>OverallDimensions | PowerConsumption | | |
| OpticalSensor | ResouceID<br>ManufcturerName<br>SerialNumber | | CycleTime<br>SetUpTime<br>MaintenaceCost | | PowerConsumption | Feedback | |
| RemovalCoverBaseAndSideWallsController | ResouceID<br>ManufcturerName<br>SerialNumber | | CycleTime<br>SetUpTime<br>MaintenaceCost | OverallDimensions | PowerConsumption | SelfOptimization<br>AutomaticConfiguration | |
| RawPlate | PartNumber<br>PartName<br>PartDescrription | Material<br>Size | | | | | |
| AutonomousMobileRobot1AAAAA | RobotIdentification<br>RobotDescription | | CycleTime<br>CalculatedProcessTime | OverallDimensions | PowerConsumption | SelfOptimization<br>AutomaticConfiguration | |
| OpticalScanningAndIdentificationSystem | ResouceID<br>ManufcturerName<br>SerialNumber | | CycleTime<br>SetUpTime<br>MaintenaceCost | Material<br>OverallDimensions | PowerConsumption | AutomaticScan<br>AutomaticIdentification | |
| OpticalScanningAndIdentification | ProcessID<br>ProcessDescription | EstimatedTime | CycleTime<br>ScanningTime | DimentionalAccuracy | InputVoltage<br>InputCurrent | | |
| OpticalScanningAndIdentificationController | ResouceID<br>ManufcturerName<br>SerialNumber | | CycleTime<br>SetUpTime<br>MaintenaceCost | OverallDimensions | PowerConsumption | SelfOptimization<br>AutomaticConfiguration | |
| ScannedPlate | PartNumber<br>PartName<br>PartDescrription | Material<br>Size | | | | | |
| CustomiseCdpSystem | ResouceID<br>ManufcturerName<br>SerialNumber | | CycleTime<br>SetUpTime<br>MaintenaceCost | Material<br>OverallDimensions | PowerConsumption | MaxCuttingVelocity<br>MaxCuttingFeed<br>MaxDrillingVelocity<br>MaxDrillingFeed<br>MaxPolishingVelocity<br>MaxPolishingFeed | |
| CustomiseCdp | ProcessID<br>ProcessDescription | EstimatedTime | CycleTime<br>ProcessTime | ProcessForce<br>DimentionalAccuracy | InputVoltage<br>InputCurrent | | |
| CustimiseCdpController | ResouceID<br>ManufcturerName<br>SerialNumber | | CycleTime<br>SetUpTime<br>MaintenaceCost | OverallDimensions | PowerConsumption | SelfOptimization<br>AutomaticConfiguration | |
| AutonomousMobileRobotController | ResouceID<br>ManufcturerName<br>SerialNumber | | CycleTime<br>SetUpTime<br>MaintenaceCost | OverallDimensions | PowerConsumption | SelfOptimization<br>AutomaticConfiguration | |
| BeltConveyor | ConveyorID<br>ManufacturerName | | | | | | RequiredThroughput<br>Length |
| Accumulator | AccumulatorID<br>ManufacturerName | | | | | | RequiredThroughput<br>Length |
| TurnTable | TurnTableID<br>ManufacturerName | | | | | | RequiredThroughput<br>CrossTransfer |
| CurvedConveyor | ConveyorID<br>ManufacturerName | | | | | | RequiredThroughput<br>InnerRadius<br>OuterRadius |
| | | | | | | | |
| | | Products | | | | | |
| | | Processes | | | | | |
| | | Resources | | | | | |

*Figure 21 Properties Attributes*

## Appendix A.3: Logistics design View [3]

| | | | | | | | |
|---|---|---|---|---|---|---|---|
| Model Metadata: | | | | | | | |
| ModelName | ModelUUID | Created | LastModified | Linked to | | | |
| LogisticsDesign | 61f329875d15c20896099634 | 2022-01-27T23:23:51.594Z | 2022-01-27T23:26:29.729Z | | | | |
| | | | | | | | |
| | | | | | | | |
| Node Data: | | | | | | | |
| | | | | | | | |
| NodeType | UUID | Name | Description | parentId | RequiredThroughput | Length | |
| BeltConveyor | 8cc53fa3-ae1b-4d51-a62d-fda1aa45fa66 | BeltConveyor | | null | 17 | 18 | |
| | | | | | | | |
| NodeType | UUID | Name | Description | parentId | RequiredThroughput | Length | |
| Accumulator | 4fd29707-a1ed-4f32-a55e-824462a54fce | Accumulator | | null | 17 | 20 | |
| | | | | | | | |
| NodeType | UUID | Name | Description | parentId | RequiredThroughput | CrossTransfer | |
| TurnTable | 9390c9b3-d08c-42a0-88bd-5da9b563ee30 | TurnTable | | null | 17 | 33 secs | |
| | | | | | | | |
| NodeType | UUID | Name | Description | parentId | RequiredThroughput | InnerRadius | OuterRadius |
| CurvedConveyor | f1b5d305-7685-49fc-be6b-96e60b14045b | CurvedConveyor | | null | 3.825 | 25 | 45 |
| | | | | | | | |
| | | | | | | | |
| Edge Data: | | | | | | | |

*Figure 22 Logistics design View*

# Appendix B: Local and Domain Specific Language (AutomationML) [4]

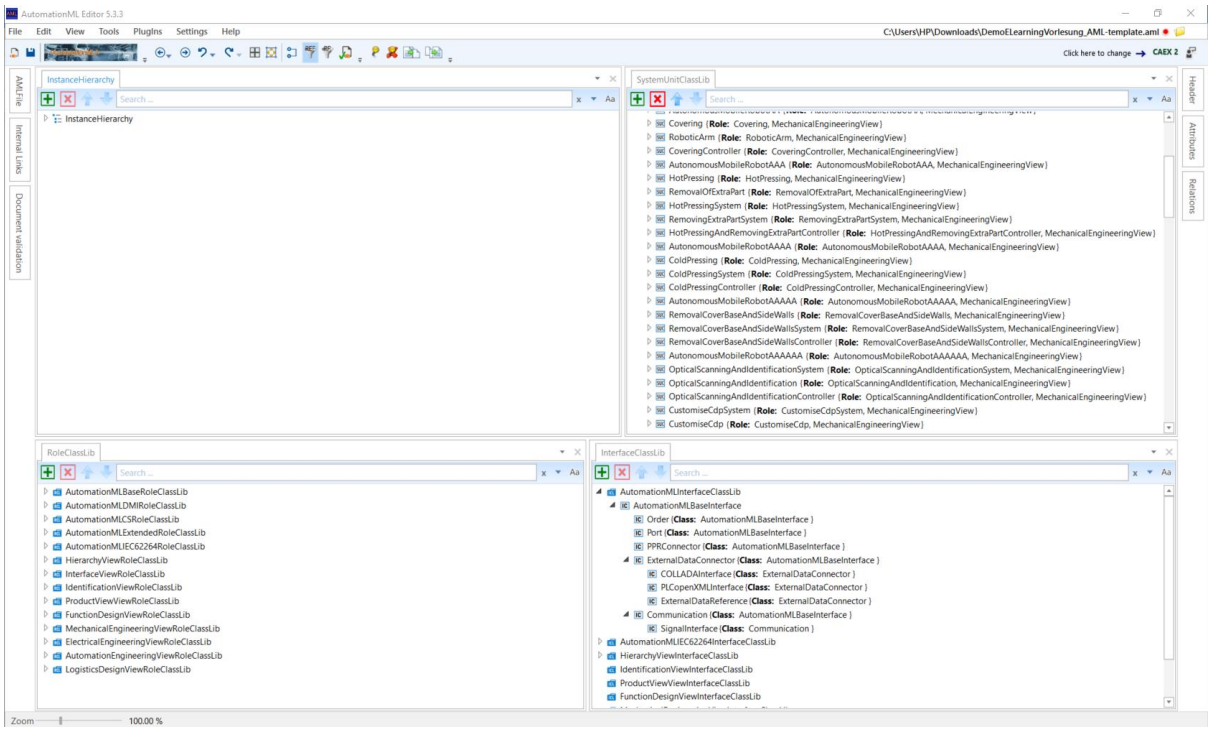


*Figure 23 Local and Domain Specific Language (AutomationML)*

## Appendix C: Asset Administration Shell of Hot-Pressing System [5]

1/17/22, 8:38 PM HotPressingSystem

# HotPressingSystem - Asset Administration Shell UI

Generic UI to discover the Asset Administration Shell

### Asset Administration Shell

| | |
|---|---|
| **IdShort** | HotPressingSystem |
| **Identifier (Undefined)** | http://sms-group.com/483e594b-b06d-4313-a713-4012d2a9b18b |
| **Description[de-DE]** | |
| **Description[en-US]** | |

### IdentificationView

| | |
|---|---|
| **IdShort** | IdentificationView |
| **Identifier (Undefined)** | http://sms-group.com/824c68c8-3f13-4212-9acc-bdcf250d1154 |
| **Description[en-US]** | |

#### Submodel-Elements

- ResourceID
- ManufacturerName
- SerialNumber

### FunctionDesignView

| | |
|---|---|
| **IdShort** | FunctionDesignView |
| **Identifier (Undefined)** | http://sms-group.com/3b6973cd-2167-4804-a056-7504c04571e9 |
| **Description[en-US]** | |

#### Submodel-Elements

- CycleTime

localhost:5001/ui 1/2

RepairCost

MaintenanceCost

## MechanicalEngineeringView

| | |
|---|---|
| **IdShort** | MechanicalEngineeringView |
| **Identifier (Undefined)** | http://sms-group.com/f50cdc07-6be9-4eef-98f3-ca69a0108231 |
| **Description[en-US]** | |

### Submodel-Elements

Material

OverallDimensions

## ElectricalEngineeringView

| | |
|---|---|
| **IdShort** | ElectricalEngineeringView |
| **Identifier (Undefined)** | http://sms-group.com/892f658b-b45c-416a-ad31-0ecd27ab89f7 |
| **Description[en-US]** | |

### Submodel-Elements

PowerConsumption

## AutomationEngineeringView

© Robert Bosch GmbH 2020 License EPL-2.0



*Figure 24 Asset Administration Shell of Hot-Pressing System*

## Appendix Bibliography

[1] G. E. E. d. e. chains, *Model Identification View*, Magdeburg, 2022,

https://drive.google.com/file/d/1APHdbltM5qJ8DkxSZVZW7S8Jh5f3Yz3o/view?usp=sharing

[2] G. E. E. d. e. chains, *Properties_copy*, Magdeburg, 2022,

https://docs.google.com/spreadsheets/d/12Fd7HQ3oZuUD7d1Rlc5sjLGAEush-Gm3/edit?usp=sharing&ouid=106754697654051759026&rtpof=true&sd=true

[3] G. E. E. d. e. chains, *2022-01-28-model-logisticsdesig*, Magdeburg, 2022,

https://drive.google.com/file/d/1VVhTU2yXHAys9Sy17DtDkJFd2yhdOb6Z/view?usp=sharing

[4] G. E. E. d. e. chains, *AutomationML*, Magdeburg, 2022,

https://drive.google.com/file/d/1FpNzrygMWMrO53A9jMGP3HllkXT7iMuB/view?usp=sharing

[5] G. E. E. d. e. chains, *Asset Administration Shell of Hot-Pressing System*, Magdeburg, 2022,

https://drive.google.com/file/d/1ByrV6u_aKNHPVrA4i5mwgqy6-PQO0jld/view?usp=sharing